(The following is not a verbatim transcript of comments or discussion that occurred during the meeting, but rather a summarization intended for general informational purposes. All motions and votes are the official records).

REGULAR MEETING – CITY COUNCIL

-JANUARY 25, 2016

Regular meeting of the City Council was held on Monday, January 25, 2016 in the Council Chambers, City Hall, Cranston, Rhode Island.

The meeting was called to order at 7:10 P.M. by the Council President.

Roll call showed the following members present: Councilmen Farina, Stycos, Botts, Council Majority Leader Archetto, Councilmen Aceto, Paplauskas, Council Minority Leader Favicchio, Council Vice-President Santamaria and Council President Lanni -9.

Also Present: Robert Coupe, Director of Administration; Jeffrey Barone, Director of Constituent Affairs; Christopher Rawson, City Solicitor; J. Patrick O'Neill, Assistant City Solicitor; Robert Strom, Finance Director; Anthony Moretti, City Council Internal Auditor; Patrick Quinlan, City Council Legal Counsel.

On motion by Councilman Farina, seconded by Councilman Aceto, it was voted to dispense with the reading of the minutes of the last meeting and they stand approved as recorded. Motion passed on a vote of 9-0. The following being recorded as voting "aye": Councilmen Farina, Stycos, Botts, Council Majority Leader Archetto, Councilmen Aceto, Paplauskas, Council Minority Leader Favicchio, Council Vice-President Santamaria and Council President Lanni -9.

I. PUBLIC ACKNOWLEDGEMENTS AND COMMENDATION

CRANSTON POLICE DEPARTMENT:

- ***OFFICERS DUCLOS, LONG, QUARANTO AND SMITH***
- ***OFFICERS AFONSO, ROCCHIO, LAQUALE, MANZOTTI, RUSSELL, SIROIS AND SGT. RUTKIEWICZ***

Council Majority Leader Archetto presented Citations to the above Officers.

COMMUNITY SERVICE RECOGNITION:

- ***EDWARD BRADY***
- ***JUSTIN ERICKSON***
- ***LUPE AGUILAR***

Councilmen Farina and Paplauskas presented Citations to the above individuals.

-JANUARY 25, 2016-

II.PUBLIC HEARINGS
(limited to docketed matters)

Paul Valletta, President of Local 1363 appeared to speak in favor of proposed Ordinance 12-15-03 and stated that today's Providence Journal stated that this contract has pension COLA increases. That is not the case. He hopes that the Journal will run a retraction tomorrow because there are no pension benefits that are negotiated in this contract. If the reporter researches this, he will see that since 1995, there has been a 3% COLA in the Fire contract.

Richard Tomlins, 400 Farmington Ave., appeared to speak and stated that he appreciates the awards given to the Police Officers this evening. As to the Fire contract, he stated that he would like to see what this contract or any contract costs the City today, tomorrow, the next day and for the next three to four years. He indicated to the Council that it has an Auditor that is being paid. He suggested having him review this contract of what it will cost the City next Fiscal Year and Fiscal Year after that.

III. RESOLUTIONS

RESOLUTION URGING THE RHODE ISLAND GENERAL ASSEMBLY TO EXCLUDE THE CITY OF CRANSTON AS A SITE LOCATION FOR TOLL GANTRIES

On motion by Councilman Botts, seconded by Council Minority Leader Favicchio, it was voted to approve this Resolution.
Under Discussion:
Councilman Paplauskas stated that he sponsored this Resolution because he is concerned about Cranston, especially Route 295. He is concerned about new businesses that look at Cranston for their new home and toll gantries affecting them.

Council Vice-President Santamaria stated that he likes the intent of this, but he does not see a traffic study or/and a fiscal impact study. There is no plan. Even the State does not have a plan on this. He would like this Resolution sent to Committee for more discussion.

On motion by Council Vice-President Santamaria, seconded by Council Majority Leader Archetto, it was voted to refer this Resolution to Committee.
Under Discussion:
Council Vice-President Santamaria asked Mr. Quinlan's opinion whether this Resolution needs to go to Committee or if it can be acted on this evening. Mr. Quinlan stated that Rule 35 of the Council Rules states that if a Resolution requires a fiscal study, it be sent to Committee.

Discussion continued under motion to approve.

Councilman Farina stated that he feels tolling is an additional tax. He has not seen from the State any economic impact on the City of Cranston or to other cities and towns. He would like to see that.

Council Vice-President Santamaria stated that this is a General Assembly debate, let them do their work. This should be vetted in Committee.

Council Minority Leader Favicchio stated that this is more taxation. We can send a small message to the General Assembly, we need to let them do their job. He does not think this needs to be sent to Committee. Just send it to the General Assembly to make a statement.

Council Majority Leader Archetto asked Administration if the Mayor supports or has any position on this Resolution. Mr. Coupe stated that the Mayor has individually stated that he does not support putting tolls in Rhode Island. He does not take positions on Resolutions. That is the City Council's business.

Council Majority Leader Archetto stated that this should go to Committee to be discussed. By passing it, it would be premature. We do not know if we would be gaining Pilot money, we need to get all the information before we pass anything that we may be sorry for.

On motion by Councilman Aceto, seconded by Council Majority Leader Archetto, it was voted to move the question. Motion failed on a vote of 4-5. The following being recorded as voting "aye": Council Majority Leader Archetto, Councilman Aceto, Council Vice-President Santamaria and Council President Lanni -4. The following being recorded as voting "nay": Councilmen Farina, Stycos, Botts, Paplauskas and Council Minority Leader Favicchio -5.

Discussion continued on main motion to approve this Resolution.

Councilman Botts stated that if people think that these gantries are just for trucks, they are wrong, because the next fiscal crisis to hit the State, it will be affecting everyone. This should be voted on tonight.

Council President Lanni stated that if there is a gantry in Cranston, every truck will be using Cranston as a bypass. This Resolution will be hurting the City of Cranston. Most important, this is a concept. There is not even a Bill before the General Assembly. He suggested that this be put before Committee and lets find out what the real impact would be to the City.

Councilman Stycos stated that the important thing to look at is how do we fix the roads in the most cost efficient and fairest way. He agrees with Council President Lanni that there is no specific proposal yet.

Roll call was taken on motion to approve this Resolution and motion failed on a vote of 4-5. The following being recorded as voting "aye": Councilmen Farina, Botts, Paplauskas and Council Minority Leader Favicchio -4. The following being recorded as voting "nay": Councilmen Stycos, Council Majority Leader Archetto, Councilman Aceto, Council Vice-President Santamaria and Council President Lanni -5.

IV. REPORT OF COMMITTEES

SAFETY SERVICES & LICENSES COMMITTEE
(Council Vice-President Richard D. Santamaria, Jr., Chair)

12-15-01 ORDINANCE IN AMENDMENT OF TITLE 5.12 OF THE CODE OF THE CITY OF CRANSTON, 2005, ENTITLED 'ALCOHOLIC BEVERAGE LICENSES' (Alcohol Server Training Certification – Class A)

On motion by Councilman Aceto, seconded by Councilman Farina, the above Ordinance was adopted on a vote of 8-0. The following being recorded as voting "aye": Councilmen Stycos, Botts, Council Majority Leader Archetto, Councilmen Aceto, Paplauskas, Council Minority Leader Favicchio, Council Vice-President Santamaria and Council President Lanni -8. Councilman Farina was not present for roll call vote.

ORDINANCE COMMITTEE
(Councilman Paul H. Archetto, Chair)

8-15-02 **ORDINANCE IN AMENDMENT OF TITLE 10 OF THE CODE OF THE CITY OF CRANSTON, 2005, ENTITLED 'MOTOR VEHICLES AND TRAFFIC' (Handicap and Disabled Parking Space Permits)**

On motion by Councilman Stycos, seconded by Council Vice-President Santamaria, it was voted to approve the above Ordinance.
Under Discussion:

Council Minority Leader Favicchio asked if there is a traffic report or traffic study on this Ordinance. Mr. Coupe stated that there is a traffic report that was provided to the Ordinance Committee and there was discussion at that meeting regarding the report. There were some concerns regarding certain ADA requirements and it was also a concern of the Administration. To the best of his knowledge, there is no fiscal note attached to the Ordinance.

Council Minority Leader Favicchio questioned what would happen with a multi-family home as to who would get to use the space.

Councilman Stycos motioned to amend this Ordinance as follows: line 68, add item 11 to state: "individual cases, the Building Inspector may recommend to the City Council that two hour parking or loading zone parking be established to accommodate residents". Council Vice-President Santamaria seconded the motion for discussion purposes.
Under Discussion:

Councilman Farina stated that he likes the idea, but a concern he has is regarding placement of the sports. The Building Inspector would designate the spot, but it may not be in the best interest of the resident who needs the spot.

Councilman Stycos withdrew his motion to amend this Ordinance because Mr. Quinlan has indicated to him that if the Ordinance is amended, it has to be reposted and go back to Committee. He would rather have this passed this evening and then he will sponsor this as soon as possible as an amendment to what passes this evening. Council Vice-President Santamaria withdrew his second to the motion to amend this Ordinance.

Council President Lanni stated that during the Ordinance Committee meeting, the Administration was asked if they had contacted the City of Providence regarding how their program operates. He answer was no and he asked them to contact Providence to see how they can do this and theoretically we could not do it. he asked if Administration has contacted the City of Providence since the Ordinance Committee meeting. Mr. Coupe stated that he had a conversation with the Traffic Engineer and in the City of Providence, many of the handicapped spaces were put in place years ago. He does not have any more information on that. He will check with our Traffic person.

Roll call was taken on motion to approve this Ordinance passed on a vote of 9-0. The following being recorded as voting "aye": Councilmen Farina, Stycos, Botts, Council Majority Leader Archetto, Councilmen Aceto, Paplauskas, Council Minority Leader Favicchio, Council Vice-President Santamaria and Council President Lanni -9.

RESOLUTION FOR TEMPORARY SEASONAL SPEED BUMPS ON LAUREL HILL AVENUE FROM ARGYLE STREET TO OXFORD STREET

On motion by Councilman Aceto, seconded by Council Majority Leader Archetto, it was voted to approve the above Resolution.
Under Discussion:

Council Vice-President Santamaria asked Council Majority Leader Archetto, sponsor of this Resolution, if he has checked with Police and Fire on their opinion regarding this. Council Majority Leader Archetto stated, no. Council Vice-President Santamaria stated that he would rather have their opinion because this may slow them down. Before this is implemented, he asked that the Administration obtain an opinion from Police and Fire to make sure this would not be a hindrance to them. Mr. Coupe stated that Police, Fire, Public Works and every other department will be asked for their opinions or input.

Councilman Botts questioned what constitutes seasonal and there is no fiscal note. Council Majority Leader Archetto stated that this would be for non-winter months. The speed bumps would be implemented in the spring and removed in late Fall.

Councilman Farina stated that realistically, he will support this. He would like to see a report of why speed bumps would be good or would not be good so he can answer his constituents when these questions come up.

Councilman Stycos stated that he also would like to hear whether they work or not.

Council Minority Leader Favicchio stated that although he is skeptical, it is worthy of a study.

Councilman Botts stated that he agrees that a study should be done and will vote in favor of this Resolution.

Roll call was taken on motion to approve this Resolution and motion passed on a vote of 9-0. The following being recorded as voting "aye": Councilmen Farina, Stycos, Botts, Council Majority Leader Archetto, Councilmen Aceto, Paplauskas, Council Minority Leader Favicchio, Council Vice-President Santamaria and Council President Lanni -9.

Council President Lanni acknowledged members of Boy Scouts in the audience working to earn community service merit badge and thanked them for attending the meeting this evening.

RESOLUTION FOR TRAFFIC SAFETY REPORT ON GLADSTONE STREET SCHOOL VICINITY

On motion by Councilman Aceto, seconded by Council Majority Leader Archetto, the above Resolution was adopted on a vote of 9-0. The following being recorded as voting "aye": Councilmen Farina, Stycos, Botts, Council Majority Leader Archetto, Councilmen Aceto, Paplauskas, Council Minority Leader Favicchio, Council Vice-President Santamaria and Council President Lanni -9.

FINANCE COMMITTEE
(Councilman Steven A. Stycos, Chair)

12-15-03 ORDINANCE RATIFYING THE INTERNATIONAL ASSOCIATION OF FIREFIGHTERS, AFL-CIO LOCAL UNION 1363 (FY 2016-2019)

On motion by Councilman Aceto, seconded by Council Majority Leader Archetto, it was voted to approve the above Ordinance.
Under Discussion:
Councilman Farina stated that this is a fair contract and there are no COLA increases in this contract. COLA was put in their contract years ago.

Councilman Stycos asked Solicitor and Mr. Quinlan to explain the Section regarding COLA pension and why it is in the contract. Solicitor Rawson stated that Section 24.2 matches the settlement agreement at the State level. That is a continuation of the original agreement. It is in the contract to codify it. Mr. Coupe stated that per legal counsel who represented the City in the lawsuit in 2003, the language of the settlement was different then the language in the contract. The language in this contract had not been changed. This is making the change to match the language of the settlement agreement. He stated that this language protects the City from anyone coming along and saying that they should get higher pension benefits then is provided in that settlement. Mr. Quinlan stated that he agrees with this analysis.

Council Minority Leader Favicchio stated that this is a fair contract and is in line with other contracts that we have supported in the past.

Councilman Stycos stated that he will not support this contract because what it does not do. It does not address the huge amount of Overtime we spend every year in this department. That needs to be addressed. There is no attempt to address this. Also, he finds 15 paid holidays too many.

Councilman Paplauskas stated that he will be supporting this contract. This is a fair contract. He appreciates the firefighters' hard work.

Councilman Botts stated that he will also be supporting this contract. 6% raise over three years is fair.

Council President Lanni stated that Mr. Valletta and the firefighters have always been fair when the City was in financial trouble, they came forward to help the City by taking pay cuts. Now they will be paying towards their Delta Dental. This is a fair contract.

Roll call was taken on motion to approve this Resolution and motion passed on a vote of 8-1. The following being recorded as voting "aye": Councilmen Farina, Botts, Council Majority Leader Archetto, Councilmen Aceto, Paplauskas, Council Minority Leader Favicchio, Council Vice-President Santamaria and Council President Lanni -8. The following being recorded as voting "nay": Councilman Stycos -1.

TAX INCENTIVE APPLICATION FOR JMDH REAL ESTATE OF CRANSTON, LLC (Restaurant Depot) – TEN YEAR COMMERCIAL

On motion by Councilman Farina, seconded by Council Majority Leader Archetto, it was voted to approve the above Tax Incentive Application.
Under Discussion:

Councilman Farina stated that this is not a tax break. This is a tax reduction on building being added. They will be adding 25 new jobs.

Council Majority Leader Archetto stated that he will be in favor of this Tax Incentive Application. This business will be staying in Cranston and will be creating 25 new jobs and kudos to the Administration.

Council Minority Leader Favicchio echoed remarks made by Councilman Farina and Council Majority Leader Archetto and also thanked the Administration and the Economic Development Department for their work in processing this Tax Incentive.

Roll call was taken on motion to approve this Tax Incentive Application and motion passed on a vote of 8-1. The following being recorded as voting "aye": Councilmen Farina, Botts, Council Majority Leader Archetto, Councilmen Aceto, Paplauskas, Council Minority Leader Favicchio, Council Vice-President Santamaria and Council President Lanni -8. The following being recorded as voting "nay": Councilman Stycos -1.

RESOLUTION AUTHORIZING REAL ESTATE TAX ABATEMENTS

On motion by Councilman Farina, seconded by Council Minority Leader Favicchio, the above Resolution was adopted on a vote of 9-0. The following being recorded as voting "aye": Councilmen Farina, Stycos, Botts, Council Majority Leader Archetto, Councilmen Aceto, Paplauskas, Council Minority Leader Favicchio, Council Vice-President Santamaria and Council President Lanni -9.

RESOLUTION AUTHORIZING MOTOR VEHICLE TAX ABATEMENTS

On motion by Councilman Farina, seconded by Council Minority Leader Favicchio, the above Resolution was adopted on a vote of 9-0. The following being recorded as voting "aye": Councilmen Farina, Stycos, Botts, Council Majority Leader Archetto, Councilmen Aceto, Paplauskas, Council Minority Leader Favicchio, Council Vice-President Santamaria and Council President Lanni -9.

TAX INTEREST WAIVER APPROVALS

On motion by Councilman Farina, seconded by Council Vice-President Santamaria, it was voted to approve the above Tax Interest Waiver Approvals. Motion passed on a vote of 9-0. The following being recorded as voting "aye": Councilmen Farina, Stycos, Botts, Council Majority Leader Archetto, Councilmen Aceto, Paplauskas, Council Minority Leader Favicchio, Council Vice-President Santamaria and Council President Lanni -9.

TAX INTEREST WAIVER DENIALS

On motion by Councilman Farina, seconded by Councilman Botts, it was voted to approve the above Tax Interest Waiver Denials. Motion passed on a vote of 9-0. The following being recorded as voting "aye": Councilmen Farina, Stycos, Botts, Council Majority Leader Archetto, Councilmen Aceto, Paplauskas, Council Minority Leader Favicchio, Council Vice-President Santamaria and Council President Lanni -9.

AUDIT COMMITTEE

REPORT ON FYE 2015 FISCAL AUDIT BY MARCUM

On motion by Councilman Farina, seconded by Councilman Paplauskas, it was voted to approve the FY 2015 Fiscal Audit.

Under Discussion:

Councilman Stycos asked Mr. Moretti go address what occurred procedurally since the December Council meeting where the Council failed to approve the Audit and the discussion with the Auditor General.

Mr. Moretti stated that the Audit was not approved by the City Council at its December meeting for a number of reasons: The Audit Committee scheduled a meeting on December 16th. Due to lack of quorum, there was no recommendation from the Audit Committee at that time; the audited financials of the Charter School was not complete or submitted to the Finance Department for incorporation to the City Audit; there was change I pension recording accounting standards. The week prior to the December 31st deadline to submit the Audit to the Auditor General, there were two conference calls with the Auditor General to discuss the circumstances to request an extension. Subsequent to that, the extension was granted. Cranston was not alone in requesting an extension due to the change in the accounting standards. Wednesday of last week, the Charter School Audit was submitted and last Thursday, the Audit Committee met and recommended approval of the Audit to the City Council. There were no real comments regarding the Management Letter because members of the Audit Committee did not receive the Management Letter until that evening.

Council Minority Leader Favicchio stated that there is a lot of blame to go around why the Audit was not ready by December 31st. The School Department did not have the numbers, the Audit Committee could not meet because of lack of quorum.

Councilman Aceto stated that by the Council not approving the Audit last month, this is doing responsibility to the taxpayers. He also stated that if there are members of Audit Committee that frequently do not attend their meetings, maybe they should be replaced for next year.

Councilman Stycos stated that he is introducing an Ordinance this evening to add an additional member to the Audit Committee, City Council Auditor, which will make the membership an odd number and may help with quorum.

Mr. Strom stated that regarding the Audit being done sooner, we have what is called a 60 day period. We have 60 days to record our collections after the end of the Fiscal Year. Also, due to GASB 68, it has created more work and our Auditors had to get information on the State level for Fire, Police, City workers, etc. for pensions. Next year, hopefully, things will go smoother. Historically, the Auditors come into City Hall in the middle of October and we have always been on time with the Audit, except for this year.

Roll call was taken on motion to approve the FY 2015 Fiscal Audit. Motion passed on a vote of 9-0. The following being recorded as voting "aye": Councilmen Farina, Stycos, Botts, Council Majority Leader Archetto, Councilmen Aceto, Paplauskas, Council Minority Leader Favicchio, Council Vice-President Santamaria and Council President Lanni -9.

CLAIMS COMMITTEE
(Councilman Michael W. Favicchio, Chair)

REPORT OF SETTLED CLAIMS *(Informational purposes):* Amerra Ziyadeh $3,083.29 vehicle damage; Rhode Island Public Transit Authority $1,125.00 vehicle damage.

No action needed.

V. PUBLIC HEARINGS

Valerie Schuele appeared to speak in favor of "Resolution urging the Rhode Island General Assembly to exclude the City of Cranston as a site location for Toll Gantries".

Richard Tomlins, 400 Farmington Ave., appeared to speak and questioned what the cost is to repair our roads compared to other cities and towns. He also stated that the City should do an analysis of what other cities and towns pay for their firefighters. He hears nothing on this. One point is we are not looking out for the City overall. Councilman Farina indicated that the Council Auditor and Mr. Strom gave an impact study of this contract at the Finance Committee meeting and the Committee reviewed those studies.

Roland Coutu, 27 Lee St., appeared to speak and stated that houses in the City are being built on flood zones. He questioned why houses are allowed to be built in every single lot without a say from the neighborhood. His neighborhood is in ruins. A very large house was allowed to be built across the street from his house, which is on a flood zone. His home never flooded until homes started getting built in his neighborhood. This is not right. Old neighborhoods are being ruined. Council President Lanni stated that DEM does not allow building on a floodplain. He asked the Administration to check into this to see if there is a violation on this particular property. Mr. Coupe stated that he will speak to Mr. Coutu and look into this.

VI. ELECTION OF CITY OFFICIALS

BOARD OF CONTRACT & PURCHASE:

- ***RICHARD DELSESTO* – filling un-expired term of Colleen Crudele for term ending 1/2/2017.**

City Clerk indicated that this is a majority leader appointment and no vote is needed.

VII. REPORT OF CITY OFFICERS

None.

VIII. EXECUTIVE COMMUNICATIONS

REPORT ON HIRING OF SPECIAL COUNSEL, CONSULTANTS, ETC., PURSUANT TO CHARTER SECTION 15.05

Council Vice-President Santamaria asked for explanation for the fees paid to Attorney Matthew Callahan, which is listed on page 6 of the report. Solicitor Rawson stated that this amount is the City's share of the cost for the LEOBOR hearing. Basically, this is Administrative costs.

Council Vice-President Santamaria questioned fees paid to Law Firm of Donoghue Barrett for State Pension lawsuit. Solicitor Rawson stated that Attorney Dolan is representing the City.

CRANSTON FIRE DEPARTMENT:

REQUEST TO BE CONTINUED IN SERVICE FOR ONE YEAR:

- ***CAPT. JAMES DAWBER***

Mr. Coupe appeared to speak.

On motion by Councilman Farina, seconded by Council Minority Leader Favicchio, it was voted to approve the above request. Motion passed on a vote of 9-0. The following being recorded as voting "aye": Councilmen Farina, Stycos, Botts, Council Majority Leader Archetto, Councilmen Aceto, Paplauskas, Council Minority Leader Favicchio, Council Vice-President Santamaria and Council President Lanni -9.

- ***CAPT. TIMOTHY MCGARTY***

Mr. Coupe appeared to speak.

On motion by Councilman Farina, seconded by Council Minority Leader Favicchio, it was voted to approve the above request. Motion passed on a vote of 9-0. The following being recorded as voting "aye": Councilmen Farina, Stycos, Botts, Council Majority Leader Archetto, Councilmen Aceto, Paplauskas, Council Minority Leader Favicchio, Council Vice-President Santamaria and Council President Lanni -9.

REQUEST TO BE PLACED ON PENSION EFFECTIVE JANUARY 22, 2016:

- ***DEPUTY CHIEF KEITH NEWMAN***

Mr. Coupe appeared to speak.

On motion by Councilman Farina, seconded by Council Minority Leader Favicchio, it was voted to approve the above request. Motion passed on a vote of 9-0. The following being recorded as voting "aye": Councilmen Farina, Stycos, Botts, Council Majority Leader Archetto, Councilmen Aceto, Paplauskas, Council Minority Leader Favicchio, Council Vice-President Santamaria and Council President Lanni -9.

IX. COUNCIL PRESIDENT COMMUNICATIONS

Council President Lanni stated that as to the Audit not being approved last month by the City Council, it was not a big deal. It was our Mayor when he attached the City Council stating that the Council was irresponsible and jeopardizing our bond rating. The City Council was just doing their job. Mr. Moretti has finalized the State Police report and cost. He also stated that he will be calling a special Council meeting in February for a presentation regarding this. He asked that the Administration supply Mr. Moretti with any information he may need.

Council President Lanni stated that he received a phone call from School Committee Member Wall of a complaint of no sidewalks on Ambrose St. for children to walk to school. Council President Lanni asked that the Administration look at that for possible sidewalk, at least on one side of the street. He asked for a report from the Administration at the next Council meeting.

X. COUNCIL MEMBER COMMUNICATIONS

COUNCILMAN STYCOS:

- ***Status of Knight Farm trail application to DEM (Cont. 11/23/2015 & 12/21/2015)***

Mr. Barone stated that application has been received and we are waiting review of application and signature and then it will be forwarded to DEM.

- ***124 Grand Ave. – failure to respond to complaints of alleged building code violations***

Councilman Stycos stated that a neighbor of this property has filed four separate complaints in July with the Building Inspector and nothing has been done. The most recent complaint is roof vent was installed without proper permit. Mr. Barone stated to Councilman Stycos that he will contact him tomorrow to discuss this with him.

- ***Stoppage of collection of electronic waste – Administration report***

Councilman Stycos stated that he received information from Mr. Barone today regarding this issue and no discussion is needed.

Councilman Aceto asked if we have looked to see if anyone else will do this collection for the City. Mr. Barone stated, not at this point. Councilman Aceto stated that he will contact the City of Warwick tomorrow to see who they use and call Mr. Barone with information.

COUNCIL MAJORITY LEADER ARCHETTO:

- ***Policy on violations for mattress/furniture left on sidewalk***

Council Majority Leader Archetto asked how long these types of items will be left out before they are removed. Mr. Barone stated that that is addressed as soon as the City is notified. Once the City is notified, it is turned over to the Clean City Coordinator and he contacts the property owner and this is rectified that way. There is no Ordinance stating that the City can place a lien on a property if the City picks up a mattress. He also stated that the City has seen a lot less items left out since we have had a Clean City Coordinator.

- ***Administrative report on stolen trucks***

Council Majority Leader Archetto stated that the City Council had to find out about trucks being stolen through the media. There was no communication between the Administration and the Ward Councilman. He asked what transpired the evening that the trucks were stolen. He also asked if there was Police patrol and how the thieves were able to start the trucks. Mr. Barone stated that that there is an ongoing investigation and the trucks have been recovered, but the plows were not. He stated to Council Majority Leader Archetto that he can provide him with a copy of the Police Report if he would like. He also stated that two trucks were City trucks and were housed at the Stadium and the two other trucks were School Department trucks and they were housed at Park View Middle School. Patrol was increased in the area and the thieves plowed through the fence and the trucks were probably hotwired.

COUNCILMAN ACETO:

- ***Illegal dumping – Burlingame, Hope, and Laten Knight Roads (Cont. 12/21/2015 for update)***

Mr. Barone stated that when it comes to dumping in Western Cranston, the Highway Department is sent out. Police patrol will be increased in those areas. The City is also looking at installing solar cameras in certain areas.

- ***Administration report on Senior Center press conference incident on January 5, 2016***

Councilman Aceto asked if there will be a report given by the Administration, even if it's in Executive Session. Mr. Coupe stated that this is a personnel issue and he cannot comment. Councilman Aceto stated that, if necessary, an Executive Session be scheduled, to discuss this and if the former Director or her representative need to be notified of this meeting, that also be done. Mr. Coupe stated that there is a privacy issue. There is a requirement for the City Council to give Advice and Consent of appointment of a Director, but he does not think there is a requirement that the City Council act or discussion needed regarding resignation of a Department Head.

COUNCIL MINORITY LEADER FAVICCHIO:

- ***Status update of Capuano Dr. (Cont. 12/21/2015)***

Council Minority Leader Favicchio suggested that the Solicitor research the Secretary of State website because there may be banks and corporations who are sued, which may be of help. City Clerk indicated that there is a House Bill 7007 requiring registered agent be filed for foreclosure. This Bill is pending and the City Council may consider supporting it.

COUNCIL VICE-PRESIDENT SANTAMARIA:

- ***Bridge on Park Ave. (Cont. 12/21/2015 for status update on safety of bridge and removal of barrels)***

Council Vice-President Santamaria stated that this issue has been addressed and can be removed from the Docket.

- ***Prism Streetlight Program - Status Update***

Mr. Barone stated that a report was received on Friday from Public Works. The Mayor, Mr. Coupe and Mr. Mason will review it as far as cost and procedure.

Council Vice-President Santamaria asked Mr. Mason to attend the next Public Works Committee meeting to give an update.

Council President Lanni asked that this item be added to the next Public Works Committee agenda.

- ***Condition of Eastview, Midvale and Woodridge Roads***

Council Vice-President Santamaria stated that these roads are horrendous because of the utility company doing work. Mr. Barone stated that this is all temporary paving, permanent will be done in the spring.

- ***Amnesty Day***

Council Vice-President Santamaria stated that there will be an amnesty day in March and a lot of people do not know about this. He asked if Administration can advertise in the Providence Journal, Cranston Herald or Facebook advising the residents of this. Mr. Barone stated that informational brochure will be mailed out within the next few weeks in English and Spanish.

- *Grant Money for Cameras*

Council Vice-President Santamaria asked Administration to research and report back to the Council at the February Council meeting the possibility of obtaining grant money for cameras following the theft of four City trucks with plows. Mr. Barone stated that he reached out to the Schools. They are in the process of getting all the schools fitted with cameras and swipe cards. The Police Department is looking at solar cameras to be installed in heavy areas where people drop off items for trash.

COUNCILMAN FARINA:

- ***Boat Trailer Signs (Cont. 12/21/2015 for status update)***

Mr. Barone stated that the signs are in, but cannot be installed until spring.

Council President Lanni stated that we have accumulated $272,000 in legal fees since last year. He asked Mr. Moretti to make note of this. He also stated that the amount the City has spent in picking up mattresses is called inefficiencies.

XI. OLD BUSINESS

None.

XII. INTRODUCTION OF NEW BUSINESS*

***(for informational purposes. All new business is referred to Committee for public hearing)**

1-16-01 **ORDINANCE IN AMENDMENT OF CHAPTER 17 OF THE CODE OF THE CITY OF CRANSTON, 2005, ENTITLED 'ZONING' (Change of Zone – 306 Scituate Ave.). Petitioner – West Bay LLC.**

1-16-02 **ORDINANCE IN AMENDMENT OF CHAPTER 3.04 OF THE CODE OF THE CITY OF CRANSTON, 2005, ENTITLED 'FISCAL PROVISIONS' (Audit Committee).**

1-16-03 **ORDINANCE IN AMENDMENT OF TITLE 15.04 OF THE CODE OF THE CITY OF CRANSTON, 2005, ENTITLED 'BUILDING CODE' (Library Impact Fees).**

1-16-04 **ORDINANCE IN AMENDMENT OF TITLE 2 OF THE CODE OF THE CITY OF CRANSTON, 2005, ENTITLED 'ADMINISTRATION AND PERSONNEL' (Minimum Wage).**

CLAIMS:

- **Personal injury claim of Syan Siakala from alleged incident on September 22, 2015.**
- **Personal injury claim of Arthur J. Dauphinais from alleged incident on November 23, 2015.**

On motion by Councilman Farina, seconded by Council Minority Leader Favicchio, it was voted to refer the above new business to the respective Committees. Motion passed on a vote of 9-0. The following being recorded as voting "aye": Councilmen Farina, Stycos, Botts, Council Majority Leader Archetto, Councilmen Aceto, Paplauskas, Council Minority Leader Favicchio, Council Vice-President Santamaria and Council President Lanni -9.

-JANUARY 25, 2016-

XIII. MISCELLANEOUS BUSINESS ON CLERK'S DESK

RIDOT – Surplus State Land offer: Plat 13, Lot 1 off Pontiac Ave & Sharpe St.

No discussion took place.

The meeting adjourned at 9:55 P.M.

Maria Medeiros Wall, JD
City Clerk

Rosalba Zanni
Assistant City Clerk/Clerk of Committee

(See Stenographic Notes of Ron Ronzio, Stenotypist)

12-15-01

THE CITY OF CRANSTON

ORDINANCE OF THE CITY COUNCIL

IN AMENDMENT OF TITLE 5.12 OF THE CODE OF THE CITY OF CRANSTON, 2005, ENTITLED "ALCOHOLIC BEVERAGE LICENSES (Alcohol Server Training Class A)

No. 2016-1

Passed:
January 25, 2016

John E. Lanni, Jr., Council President

Approved:
February 4, 2016

Allan W. Fung, Mayor

It is ordained by the City Council of the City of Cranston as follows:

Section 1. Title 5.12. entitled "Alcoholic Beverage Licenses' is hereby amended as follows:

5.12.090 - Training certification for liquor license holders.

A. Effective [~~October 1, 1998,~~] December 1, 2015 and every renewal date thereafter, the holders of all Class A, B (full privilege), B (limited), C, D (full privilege), D (limited), and J liquor licenses, shall present to the committee on safety services and licenses evidence of the successful completion of an alcohol server [~~'s/dispenser's training program by either the license holder or a designated employee.~~] training regulations as promulgated by the department of business regulation as set forth in RIGL 3-7-6.1(b).

1) All persons who sell or serve alcoholic beverages; anyone serving in a supervisory capacity over those who sell or serve alcoholic beverages; anyone whose job description entails the checking of identification for the purchase of alcoholic beverages; and valet parking staff shall receive alcohol server training regulations, as set forth herein.
2) Any eligible employee of a licensee shall be required to complete certified training within sixty (60) days of the commencement of his or her employment and must attain a minimum score of seventy-five percent (75%).
3) Licensees shall require servers to be recertified every three (3) years.
4) As a condition of license renewal, and as part of the license renewal application, each licensee must submit to the City Clerk information verifying that all persons listed under subsection (A)(1)) of this section and employed by the licensee for more than sixty (60) days in the past year have completed a certified program within the last three (3) years.
5) All persons identified under subsection (A)(1) of this section must have their valid server permits on the premises when engaged in the sale or service of alcoholic beverages.
6) Individuals who have been issued a server permit in another jurisdiction by an approved Rhode Island alcohol server training program shall be determined to be in compliance with this section subject to the three-year (3) limitation contained herein.

B. A certificate of successful completion of the training program shall be posted in a visible area of the licensed establishment.

C. ~~[A list of alcohol server's/dispenser's training programs recommended by the mayor's advisory committee on substance abuse will be submitted to the committee on safety services and licenses for their approval.~~] The office of the city clerk will make available to license holders and new applicants a list of the approved training programs. Approved alcohol server training programs are those that meet the criteria set forth in RIGL 3-7-6.1(c) and the Department of Behavioral Healthcare, Developmental Disabilities and Healthcare.

D. [~~In the event the "designated" employee terminates employment in the licensed establishment, the license holder, or a new "designated" employee has ninety (90) days to provide evidence of successful completion of the training program to the office of the city clerk.~~]

E. In the event that the liquor license is transferred to a new owner, the new license holder, [~~or a designated employee~~] has ninety (90) days to provide evidence of successful completion of the training program to the office of the city clerk.

F. Failure of a license holder to provide evidence of the successful completion of the training program to the office of the city clerk, shall result in the notification of said license holder to appear before the committee on safety services and licenses for a show cause hearing.

G. Violations.
Graduated penalties for licensees for violations within a three-year (3) period beginning with an initial written warning for violations within a three-year (3) period for a first violation; a written warning for a second violation; a fine not to exceed two hundred fifty dollars ($250.00) for a third violation or noncompliance; and a license suspension for subsequent violations.

All licensees shall be in compliance with said regulations within ninety (90) days of December 1, 2015, or be subject to the penalties set forth herein.

Section 2: This Ordinance shall take effect upon its final adoption.

Positive Endorsement	Negative Endorsement (attach reasons)
1/25/16	
Christopher Rawson, Solicitor / Date	Christopher Rawson, Solicitor Date

Sponsored by: Safety Services & Licenses Committee

Referred to Safety Services: January 4, 2016

08-15-02

THE CITY OF CRANSTON

ORDINANCE OF THE CITY COUNCIL

IN AMENDMENT OF TITLE 10 OF THE CODE OF THE CITY OF CRANSTON, 2005, ENTITLED "VEHICLES AND TRAFFIC"
(Handicap and Disabled Parking Space Permits)

No. 2016-3

Passed:
January 25, 2016

John E. Lanni, Jr., Council President

Approved:
February 4, 2016 pursuant to Sect. 3.14 of the City Charter.
Allan W. Fung, Mayor

It is ordained by the City Council of the City of Cranston as follows:

Section 1. Title 10, entitled VEHICLES AND TRAFFIC, is hereby amended by adding the following new chapter:

10.50 Handicapped and Disabled Parking.

10.50.010 Definitions

As used in this Ordinance, the following terms shall have the meanings indicated, unless a different meaning clearly appears from the context:
Handicapped Person: An individual possessing a Rhode Island Disability Parking Permit issued pursuant to Rhode Island General Law Section 31-27-8..
Handicapped Parking Sign: A sign issued by the City of Cranston reserving parking for one (1) vehicle space and erected at a designated and agreed upon area for access for a handicapped person.
Issuing Authority: Cranston Building Code Enforcement Office.
Owner: Actual owner, agent or custodian of the property wherein a sign will be erected.
.

10.50.020 Application Procedure

1. Any resident of the City of Cranston may make application to the City of Cranston for a handicapped parking space only after acquiring a handicapped placard from the State of Rhode Island.
2. Applications are to be completed in their entirety. An incomplete application form will be denied by the City of Cranston.
3. New applications shall be reviewed and approved by the Cranston Building Code

Enforcement Office, who will make the final determination regarding the granting of a handicapped parking space.

4. Renewal applications shall be reviewed and approved by the Cranston Code Enforcement Office, who will make the final determination regarding renewal of existing spaces.

5. Each applicant, whether for a new permit or a renewal, shall complete an application and provide the City of Cranston with all the information requested.

6. Temporary applications shall be reviewed and approved by the Cranston Building Code Enforcement Office, who will make the final decision in granting this temporary handicapped space for a period not to exceed three (3) months in length. If the space is needed for a longer period of time, a renewal application must be filled out and returned to the City of Cranston no later than two (2) weeks before the expiration date of the handicapped space or it will be denied. Renewal applications for temporary handicapped parking spaces shall be reviewed and approved by the Cranston Building Code Enforcement Office, who will make the final determination regarding the renewal of existing spaces.

7. The City of Cranston will promulgate and have available said applications for handicapped parking signs.

8. All approved applications shall be subject to annual review.

9. Each applicant shall submit with the completed application a Rhode Island Disability Parking Permit issued pursuant to Rhode Island General Law Section 31-27-8.

10. Approval or denial of applications will be made within thirty (30) days by the Cranston Building Code Enforcement Office.

10.50.030 Application Renewal

1. Each permit for a handicapped parking space shall be renewed on an annual basis, except for temporary handicapped spaces, as in 6, above.

2. Applications for renewal, except for temporary space renewal, shall be submitted to the City of Cranston Building Code Enforcement Office between January 1st and January 31st of each calendar year.

3. In making the final determination regarding the renewal of a previously permitted handicapped space, the City of Cranston shall apply the criteria contained in this Ordinance.

4. Once a permit is not renewed for any reason, any application by the same applicant shall be considered a new application and shall be governed by the provisions of this Ordinance.

10.50.040 Location of Handicapped Parking Spaces

1. No more than two (2) handicapped parking spaces shall be located on any block where parking is permitted on both sides of the street.

2. No more than one (1) handicapped parking space shall be located on any block where parking is permitted on only one (1) side of the street.

4. In the event that previously permitted spaces exceed the maximum allowed per block, the City of Cranston shall refrain from granting any additional spaces in that block until the number of handicapped spaces falls below the maximum allowed.

10.50.050 Issuing Authority

The Cranston Building Code Enforcement Office shall maintain a log of all existing handicapped parking spaces at the time of the effective date hereof. Further, the Cranston

08-15-02

Building Code Enforcement Office will maintain a log of all applications for handicapped parking spaces for a maximum of thirty (30) days.

10.50.060 Standards

1. No permit shall be granted where adequate handicapped-accessible, off-street parking is available.

2. The owner of the vehicle used for the applicant must reside at the same address as the applicant. A copy of the vehicle registration must accompany the application as proof of residence.

3. Any change in address or change in health status must be reported to the City of Cranston in writing within thirty (30) days of change.

10.50.070 Revocation of Permit and Removal of Sign

The City of Cranston reserves the right to revoke any permit or remove any sign for a handicapped parking space at any time for any reason.

10.50.080 Penalties

1. A person owning a vehicle parked in a handicapped parking designated area without a Rhode Island Disability Parking Permit properly displayed and qualifying under this Ordinance will be subject to citation.

2. It shall be unlawful for any person or owner of realty to erect a handicapped parking sign upon the streets of the City of Cranston without first making application for a handicapped parking sign through the City of Cranston. Each day of violation hereunder will be considered a separate offense.

3. The fine and penalty for a violation of the Ordinance designated shall be Twenty-Five ($25.00) Dollars.

10.50.90 General Provisions

1. Any stipulations made at the time of application regarding the eligibility of an applicant may be updated periodically at the request of the issuing authority.

2. Handicapped parking spaces shall not supersede existing parking regulations, including, but not limited to street sweeping, snow ban or snow removal regulations.

3. Handicapped parking signs will remain the property of the City of Cranston.

4. The granting of a handicapped parking space permit does not entitle the applicant to the exclusive use of this space. This space can be used by other handicapped persons.

Section 2. This Ordinance shall take effect upon its final adoption.

Positive Endorsement	Negative Endorsement (attach reasons)
11/25/16	
Christopher Rawson, City Solicitor Date	Christopher Rawson, City Solicitor Date

Sponsored by: Councilman Stycos; Co-sponsored by Councilman Archetto

Referred to Ordinance Committee September 17, 2015

Allan W. Fung
Mayor

Kenneth R. Mason, P.E.
Director of Public Works

Bureau of Traffic Safety

STAFF REPORT

Date: 10/13/15
To: City Council
From: Stephen Mulcahy, Traffic Engineer
Ordinance Proposal No: 8-15-02
Date referred to staff: 9/17/15
CC: Wall; Zanni; Coupe; Lopez; Barone; Giarrusso

Subject: Handicapped and Disabled Parking (see attached ordinance proposal)

BACKGROUND

Procedure: Pursuant to Section 9.06 of the City of Cranston Charter, the Bureau of Traffic Safety shall issue a report prior to the adoption of any rule, regulation, or order relating to traffic. Such reports may include in-house and/or field investigations to compile data relative to crash/accident incidence; roadway geometry; sight line distance; current codified ordinance; and other traffic control standards as defined in the ***Manual on Uniform Traffic Control Devices***, 2009 edition, approved by the Federal Highway Administration.

Existing Condition:
Given that the proposed ordinance refers only to residential handicapped and disabled parking, this report will be restricted to the same. Currently, accommodations for residential handicapped parking, namely wheel chair access from a vehicle to a private residence for one, two, and three family homes may be accessed on the private property for which there are no federal, state, or local mandates. Residential properties of four or more units constructed after 1991 must comply with American with Disabilities Act (ADA) on-site parking standards. There are currently no provisions for on-street residential handicapped parking in the City of Cranston. All night on-street parking between the hours of 1:00am and 7:00am is prohibited throughout the City, or at any such time when a snow emergency is declared.

Staff Analysis:
The ordinance proposal before this office, while well-intentioned, presents many challenges including physical, financial, administrative, and potentially legal. Though requests for handicapped or disabled parking spaces within the public right-of-way may be common, implementing a viable and compliant solution is met with great difficulty. Furthermore, it is incumbent upon this office to offer an objective analysis that best serves the interest of all City of Cranston constituents and roadway users. To that end, we seek guidance from regulatory agencies such as the Department of Justice, Federal Highway Administration, U.S. Department of Transportation, and the Rhode Island State Traffic Commission. Although some surrounding cities and towns may identify certain on-street "disabled" parking spaces with the placement of a sign, it should not be assumed that these spaces are in compliance with Americans with Disabilities Act Accessibility Guidelines (ADAAG) set forth by the USDOJ or the Access Board developed by the USDOT and FHWA. More specifically, the ADAAG sets forth the following requirements for parallel parking space compliance:

- 13' wide x 20' long level parking space to include an 8' vehicle parking space with an adjacent 5' marked access aisle
- Curb ramp at the head or foot of the space
- Sidewalk clear for lift deployment
- Mounted sign

Several drawings are attached to this report to better illustrate compliant on-street parallel parking spaces.

The city has few, if any, roadways within its network of adequate dimension to accommodate such spaces without encroaching into the lane of travel, certainly none on residential roadways from which the majority of requests are likely to be generated. Furthermore, attempts to provide such compliant parking spaces would require financial resources to cover the costs of design, engineering, construction, maintenance, and possible land acquisition.

One provision in the proposed ordinance under section **10.50.060** allows for the issuance of a permit where no "adequate" on-site provisions exist. Additionally, section **10.50.90** indicates that the permit does not entitle the applicant to the exclusive use of the space. In either case, if the applicant qualifies for an on-street space and is dependent on that space for vehicle storage and accessibility, the question arises as to what is expected of the applicant during the prohibited overnight hours, snow emergencies, or when the designated space is legally occupied by others.

The past practice of the City of Cranston has been and currently is to accept and follow the policy of RI State Traffic Commission. They have determined that approving requests to post handicap parking signs on roads that fall within their jurisdiction would subject the State to legal liability.

Other jurisdictions in warmer regions of the country have adopted permitted "blue zone" residential parking for residents meeting certain prescribed criteria, but the parking space makes no reference to "handicapped" or "disabled". Of course, these regions are not challenged by snow.

FISCAL IMPACT

No funding source has been identified for the implementation of compliant handicapped parking spaces. Construction of ADA compliant on-street residential parking spaces would certainly be prohibitive, even if an adequate location were available.

RECOMMENDATION

Due to the impracticality of the City of Cranston to provide ADA compliant on-street parking spaces, and so as to avoid exposing the City to tort liability, it is the recommendation of this office to **NOT approve** this ordinance. Moreover, if any attempt is made to overcome the challenges associated with permitted on-street parking, it would be the recommendation of this office that the terms "handicapped", "disabled" or the like in no way be assigned, correlated, or referred to as it relates to the marking of a permitted parking space within the public right of way.

ATTACHMENTS

Proposed ordinance 08-15-02; 2 drawings

Stephen Mulvey

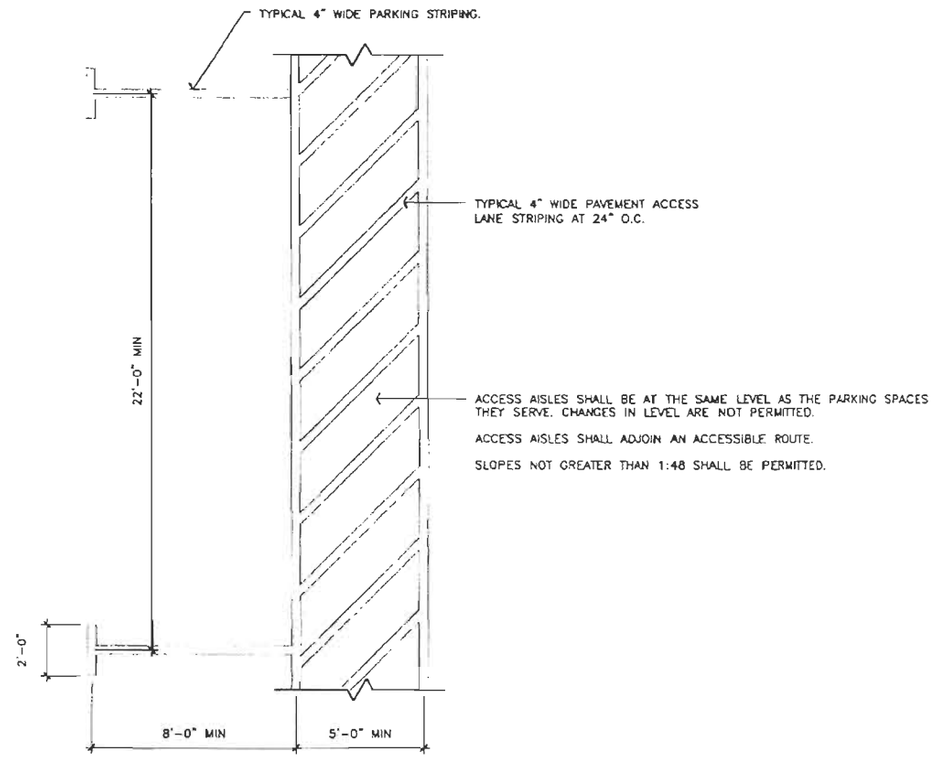

ADA ACCESSIBLE PARALLEL PARKING AISLE WIDTH FOR CARS

SCALE: 1/4"=1'-0"

02751-10 ADA ACCESSIBLE PARALLEL PARKING - CAR.DWG 07\22\08 16:06
REVISION/CREATION DATE: 6/26/08

Parallel parking spaces

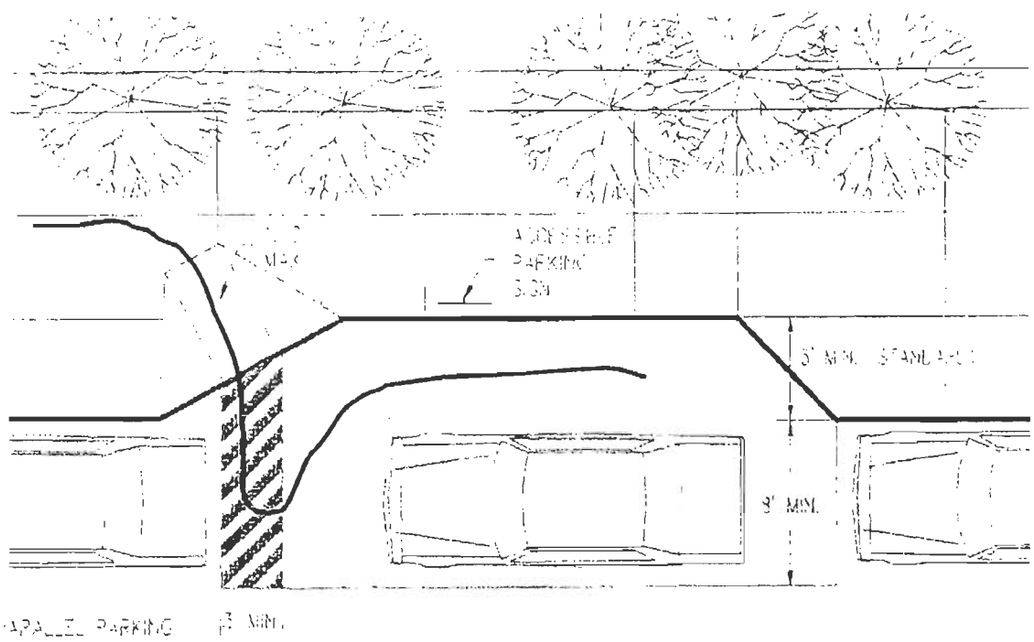

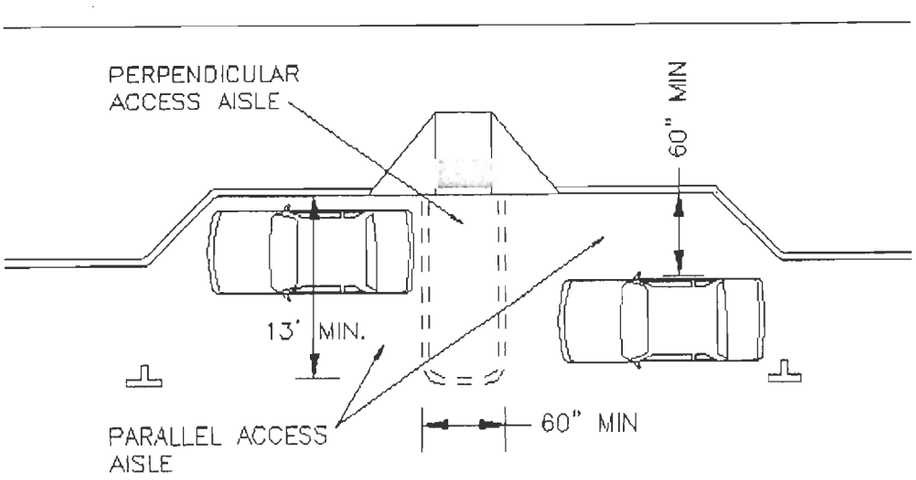

THE CITY OF CRANSTON

RESOLUTION OF THE CITY COUNCIL

SPEED BUMPS ON LAUREL HILL AVENUE FROM ARGYLE STREET TO OXFORD STREET

No. 2016-1

Passed:
January 25, 2016

John E. Lanni, Jr., Council President

Resolved that,

WHEREAS, the health, safety, and welfare of the citizens of the City of Cranston require that the speed bumps or tables be installed on a seasonal basis in the Fall, Spring, and Summer on Laurel Hill Avenue from Argyle Street to Oxford Street; and

WHEREAS, there are available portable speed bumps and tables that can be erected on a seasonal basis but removed to facilitate plowing of snow; and

WHEREAS, the speeding traffic situation along Laurel Hill Avenue mandates a solution that will slow down the speeding drivers in this area; and

WHEREAS, the Traffic Safety Commission was created to encourage and facilitate Cranston residents, motorists, businesses, and private organizations to participate in a joint effort to improve pedestrian and motorist safety on residential streets and main thoroughfares; and

WHEREAS, the Traffic Safety Commission was created to study and recommend ways and means of promoting an integrated approach to resolving traffic problems in the city that improves pedestrian safety and creates livable neighborhoods and commercial districts.

NOW THEREFORE, BE IT RESOLVED, that we, the City Council of the City of Cranston, Rhode Island do hereby request that Traffic Safety Commission and the Mayor and his administration study the issue of slowing down speeding vehicles at on Laurel Hill Avenue from its intersection with Argyle Street to Oxford Street and a develop a remedy using speed bumps that can be removed for the snow plowing season and report back to the City Council so as to alleviate the existing risks to pedestrians and the motoring public in that area;

BE IT FURTHER RESOLVED, that the City Clerk of the City of Cranston forward this Resolution to Mayor Alan Fung and to the Public Works Director and to the members of the Cranston Traffic Safety Commission for action and request a monthly report be made to the City Council on the progress in repairing resolving this vexatious problem by using speed bumps or tables that can be removed for the snow plowing season.

Sponsored by Councilman Paul H. Archetto

THE CITY OF CRANSTON

RESOLUTION OF THE CITY COUNCIL

TRAFFIC SAFETY REPORT ON GLADSTONE STREET SCHOOL VICINITY

No. 2016-2

Passed:
January 25, 2016

John E. Lanni, Jr., Council President

Resolved that,

WHEREAS, the health, safety, and welfare of the citizens of the City of Cranston require that the morning and afternoon traffic situation in the vicinity of Gladstone Street School, particularly Lawrence Street, Gladstone Street and Brown Street be alleviated; and

WHEREAS, during morning drop off of students and afternoon pickup, the situation is particularly precarious; and

WHEREAS, City of Cranston created the Traffic Safety Commission in Chapter 2.64 of the City Code to deal with difficult traffic situations; and

WHEREAS, the Traffic Safety Commission was created to encourage and facilitate Cranston residents, motorists, businesses, and private organizations to participate in a joint effort to improve pedestrian and motorist safety on residential streets and main thoroughfares; and

WHEREAS, the Traffic Safety Commission was created to study and recommend ways and means of promoting an integrated approach to resolving traffic problems in the city that improves pedestrian safety and creates livable neighborhoods and commercial districts.

NOW THEREFORE, BE IT RESOLVED, that we, the City Council of the City of Cranston, Rhode Island do hereby request that Traffic Safety Commission study the traffic situation in the area of Gladstone street particularly Lawrence Street, Gladstone Street and Brown Street be studied and a remedy be selected and reported back to the City Council so as to alleviate the existing risks to pedestrians and the motoring public in that area;

BE IT FURTHER RESOLVED, that the City Clerk of the City of Cranston forward this Resolution to Mayor Alan Fung and to the Public Works Director and to the members of the Cranston Traffic Safety Commission for action and request a monthly report be made to the City Council on the progress in repairing resolving this vexatious problem.

Sponsored by Councilman Paul H. Archetto

12-15-03

THE CITY OF CRANSTON

ORDINANCE OF THE CITY COUNCIL

ORDINANCE OF THE CITY COUNCIL RATIFYING THE INTERNATIONAL ASSOCIATION OF FIREFIGHTERS, AFL-CIO LOCAL UNION 1363 CONTRACT (FY July 1, 2016 – June 30, 2019)

No. 2016-2

Passed:
January 25, 2016

John E. Lanni, Jr., Council President

Approved:
February 4, 2016

Allan W. Fung, Mayor

It is ordained by the City Council of the City of Cranston as follows:

Section 1. The City of Cranston has through its corporate officials, bargained collectively with the International Association of Firefighters, AFL-CIO, Local 1363 which is the certified bargaining representative of Local 1363 firefighters as set forth in the contract; and Local 1363 and the City of Cranston have reached an understanding respecting the terms of a contract resulting from concession bargaining.

Section 2. That agreement in writing between the City of Cranston and Local 1363, a copy of which is attached hereto and made a part hereof, is hereby ratified, confirmed and approved by this City Council.

Section 3. That except as modified by the terms of the aforesaid agreement, the City of Cranston shall retain all powers vested in it by law and its Charter over the management, regulation and control of said City firefighters.

Section 4. Any additional agreements, letters of understanding, contract addendums or modifications during the life of this collective bargaining agreement between the parties must be ratified by the City Council and comply with Charter Sec.14.17.

Section 5. This Ordinance shall take effect upon its final adoption.

Positive Endorsement	Negative Endorsement (attach reasons)
1/25/16	
Christopher M. Rawson, Solicitor	Christopher M. Rawson, Solicitor

12-15-03

Fiscal Note

I hereby certify that it is anticipated that sufficient funds will be available to fund this contract, and I have provided a fiscal impact analysis, in accordance with Section 3.04.152 of the Cranston City Code.

Robert F. Strom, Director of Finance

Sponsored by Allan W. Fung, Mayor

Referred to Finance Committee January 14, 2016

	A	B	C	D	E	F	G	H	I	J	K	L
1			Fire IAFF Proposed Contract July 1, 2016 - June 30, 2019									
2												
3				FY 17			FY18			FY19		TOTAL
4												
5	Salary Increases											
6		3% July 1, 2017					377,434					377,434
7		3% July 1, 2018								388,757		388,757
8												766,191
9	Salary Decreases (8 Firefighters)			(472,853)								(472,853)
10	Salary Decreases (5 Firefighters)						177,320					177,320
11	Salary Decreases (5 Firefighters)									0		0
12												
13	Holiday Pay (15)			0			35,384			40,062		75,446
14												
15	Longevity	(10.33%)		0			38,568			39,725		78,293
16												
17	Payroll Taxes (1.45%)			0			6,545			6,794		13,339
18												
19	Pension	Currently (11.15%)		0			50,330			52,243		102,573
20												
21	Uniform Clothing Allowance											
22												0
23		6/30/17 $50.00/ee					9,800					9,800
24		6/30/18 $50.00/ee								9,800		9,800
25												
26												
27	Uniform Cleaning Allowance											
28		7/1/15 $100.00/ee deferred to										0
29		7/1/17 $100.00/ee					19,600					19,600
30												
31	Health Care CoPay Increase											
32		Blue Cross - Family		(28,504)			(9,485)			(19,019)		(57,008)
33		Blue Cross - Individual		(3,896)			(1,298)			(2,598)		(7,792)
34												
35		United - Family		(14,402)			(4,792)			(9,610)		(28,804)
36		United - Individual		(300)			(100)			(200)		(600)
37												
38	OPEB Increases											
39		$50.00 Increase 7/1/16		(9,100)								(9,100)
40		$50.00 Increase 7/1/17					(9,100)					(9,100)
41		$50.00 Increase 7/1/18								(9,100)		(9,100)
42												
43	Delta Dental Co- Share											
44		$ 5.00 Family per pay period		(20,410)								(20,410)
45		$ 2.00 Individual per pay period		(4,940)								(4,940)
46												
47	Delta Dental Increase Coverage to $ 3,000									3,429		3,429
48			from $ 2500									
49				(554,405)			690,206			500,283		$636,084

TENTATIVE AGREEMENT JULY 1, 2016- JULY 1, 2019

Tentative Agreement

WHEREAS, this Tentative Agreement between the City of Cranston, Rhode Island and Local 1363, International Association of Fire Fighters is entered into on DECEMBER 15, 2015 as the collective bargaining agreement, titled "Agreement Between the City of Cranston, Rhode Island and Local 1363, International Association of Fire Fighters, AFL-CIO July 1, 2013 to June 30, 2016" is set to expire and;

WHEREAS, except as specifically and expressly set forth in this Tentative Agreement and subject to the ratification procedures of both parties to this Tentative Agreement, all of the terms and conditions in the collective bargaining agreement (dated July 1, 2013 to June 30, 2016) shall continue and remain in effect and are incorporated by reference as if fully reproduced herein; and

WHEREAS, the collective bargaining agreement resulting from this Tentative Agreement shall be subject to ratification by both the City's and the Union's authorized ratifying bodies;

NOW, THEREFORE, the following contains the agreement and understanding of the parties' to enter into a collective bargaining agreement titled "Agreement Between the City of Cranston, Rhode Island and Local 1363, International Association of Fire Fighters, AFL-CIO dated July 1, 2016 to June 30, 2019.

TENTATIVE AGREEMENT JULY 1, 2016- JULY 1, 2019

(1.) p2.

AGREEMENT

This Agreement is entered into as of the 1 day of JULY, ~~2013~~ 2016, by and between the City of Cranston (hereinafter referred to as "City" or "Employer") and the International Association of Fire Fighters, Local 1363, AFL-CIO (hereinafter referred to as "Union" or "I.A.F.F." or "Local 1363"). This Collective Bargaining Agreement (hereinafter "Agreement"), is entered into pursuant to the authority granted by Rhode Island General Laws Title 28, Chapter 9.1, et seq. known as the Fire Fighters' Arbitration Act, as amended.

AWF 12/21/15 — City

L1363

TENTATIVE AGREEMENT JULY 1, 2016- JULY 1, 2019

(2)p 10. **Section 4.5 - Vacancies - Privates And Officers Ranks**

1. Vacancies in the Privates' ranks shall be filled as soon as practicable after the date vacancy occurs. A vacancy occurs as a result of a retirement, death, promotion or termination.

Effective July 1, 2016 The City may hold up to eight (8) private positions vacant.

Effective July 1, 2017 and expiring on June 30, 2019 the City may hold up to five (5) private positions vacant.

AWF 12/21/15 PEV JR

City L1363

TENTATIVE AGREEMENT JULY 1, 2016- JULY 1, 2019

(3.) p29 **Section 15.1 - Uniform Clothing Allowance and Voucher**

The uniform issue will be by the voucher system. Each member may choose clothing from the following listed items. NFPA Approved blue uniform shirt and pants, polo shirts, shoes or athletic shoes and a belt. The Chief of the Department may add or delete any additional clothing or equipment he deems necessary to the voucher list. ~~In 2009 the cost of each voucher will not exceed five hundred fifty ($550) dollars per member.~~

Effective July 1, 2015 the cost of each voucher will not exceed six hundred ($600.00) dollars.

~~Effective July 1, 2016 the cost of each voucher will not exceed seven hundred ($700.00) dollars.~~

Effective July 1, 2017 the cost of each voucher will not exceed six hundred and fifty ($650.00) dollars.

Effective July 1, 2018 the cost of each voucher will not exceed seven hundred ($700.00) dollars.

AWP 12/21/15 PEV JR

City L1363

TENTATIVE AGREEMENT JULY 1, 2016- JULY 1, 2019

(4.)p 32 **Section 15.4 - Clothing Maintenance Allowance**

~~Effective July 1, 2015, said amount shall be increased to one thousand and three hundred ($1300.00) dollars per year.~~

Effective July 1, 2017, said amount shall be increased to one thousand and three hundred ($1300.00) dollars per year.

AWF 12/21/15 PW JR

City L1363

TENTATIVE AGREEMENT JULY 1, 2016- JULY 1, 2019

(5.)p 39 **Section 16.4 - Good Attendance (Effective January 1, 1997)**

All employees who use four (4) days or less of sick leave including family illness in any calendar year shall receive two (2) days of pay for each year of good attendance accumulated until retirement; which will be paid at one-fifth (1/5) the weekly rate of pay effective for their rank at the time of their retirement (Effective January 1, 1997).

Effective July 1, 2016 Good Attendance shall no longer be accrued by any member. Any member who has received days of pay for each year of good attendance prior to July 1, 2016, shall remain with said member until retirement; which will be paid at one-fifth (1/5) the weekly rate of pay effective for their rank at the time of their retirement.

AWF 12/21/15 — City

CEV JR — L1363

TENTATIVE AGREEMENT JULY 1, 2016- JULY 1, 2019

(6.) p 42 **Section 19 - Salary and Longevity**

A. Salaries for all members of the Fire Department covered by this Agreement shall be as set forth in Appendix A hereto, which is incorporated herein by reference, which shall include the following increases:

July 1, 2016	Zero (0%) percent
July 1, 2017	Three (3%) percent
July 1, 2018	Three (3%) percent

AWF 12/21/15 — City

PEW — L1363

TENTATIVE AGREEMENT JULY 1, 2016- JULY 1, 2019

(7.)p.46, 47 **Section 21 - Medical Insurance, Dental Insurance, Life Insurance and Burial Expenses** subsections A(8) and B(4)

Effective ~~July 1, 2013~~ July 1, 2016 the following on-site co-pays shall apply:

a) Office visits and Urgent care or "Urgi-care" facilities - Ten ($10.00) dollars

b) Emergency Room visits - ~~$50.00~~ $100.00

In the event that an Urgicenter or Urgent care facility is not open and a member seeks treatment at an Emergency Room, those covered under the member's health care plan will be reimbursed the Emergency Room Co-payment of ~~fifty ($50.00) dollars.~~ one hundred ($100.00) dollars less the Urgent Care co-pay amount. In the event a member is hospitalized after being evaluated in the Emergency Room, those covered under the member's Health care plan will be reimbursed the Emergency Room Co-payment of ~~fifty ($50.00) dollars.~~ one hundred ($100.00) dollars.

AWF initials — City

REW JR — L1363

TENTATIVE AGREEMENT JULY 1, 2016- JULY 1, 2019

(8.) p46 **Section 21 - Medical Insurance, Dental Insurance, Life Insurance and Burial Expenses**

A. Blue Cross/Blue Shield

7. Health Care Co-Share – Each member shall pay, by payroll deduction, a pretax amount of twenty-three dollars and fifteen cents ($23.07) per week for a total amount of twelve hundred dollars ($1200.00) per year for an individual plan and forty-six dollars and seven cents ($46.15) per week for a total amount of twenty-four hundred (2400.00) per year for a family plan.

Effective July 1, 2016, said amount shall be increased to twenty-five dollars and ninety-seven cents ($25.97) per week for a total amount of one thousand and three hundred and fifty ($1350.00) dollars per year for individual plan and fifty one dollars and ninety-three cents ($51.93) per week for a total amount of twenty-seven hundred ($2700.00) for a family plan.

Effective July 1, 2017, said amount shall be increased to twenty-six dollars and ninety-three cents ($26.93) per week for a total amount of one thousand and four hundred ($1400.00) dollars per year for individual plan and fifty-three dollars and eighty-five cents ($53.85) per week for a total amount of twenty eight hundred ($2800.00) dollars per year for a family plan.

Effective July 1, 2018, said amount shall be increased to twenty eight dollars and eighty five cents ($28.85) per week for a total amount of one thousand and five hundred ($1500.00) dollars per year for individual plan and fifty seven dollars and seventy cents ($57.70) per week for a total amount of three thousand ($3000.00) dollars for a family plan.

AWF 12/21/15 RCW JR

City L1363

TENTATIVE AGREEMENT JULY 1, 2016- JULY 1, 2019

(9.) p46 **Section 21 - Medical Insurance, Dental Insurance, Life Insurance and Burial Expenses**

B. United Health

3. Health Care Co-Share – Each member shall pay, by payroll deduction, a pretax amount of twenty-three dollars and fifteen cents ($23.07) per week for a total amount of twelve hundred dollars ($1200.00) per year for an individual plan and forty-six dollars and seven cents ($46.15) per week for a total amount of twenty-four hundred (2400.00) per year for a family plan.

Effective July 1, 2016, said amount shall be increased to twenty-five dollars and ninety-seven cents ($25.97) per week for a total amount of one thousand and three hundred and fifty ($1350.00) dollars per year for individual plan and fifty one dollars and ninety-three cents ($51.93) per week for a total amount of twenty-seven hundred ($2700.00) for a family plan.

Effective July 1, 2017, said amount shall be increased to twenty-six dollars and ninety-three cents ($26.93) per week for a total amount of one thousand and four hundred ($1400.00) dollars per year for individual plan and fifty-three dollars and eighty-five cents ($53.85) per week for a total amount of twenty eight hundred ($2800.00) dollars per year for a family plan.

Effective July 1, 2018, said amount shall be increased to twenty eight dollars and eighty five cents ($28.85) per week for a total amount of one thousand and five hundred ($1500.00) dollars per year for individual plan and fifty seven dollars and seventy cents ($57.70) per week for a total amount of three thousand ($3000.00) dollars for a family plan.

AWF 12/2/15 Per JR

City L1363

TENTATIVE AGREEMENT JULY 1, 2016- JULY 1, 2019

(10.)p55 **Section 21 - Medical Insurance, Dental Insurance, Life Insurance and Burial Expenses**

F. Retired Benefits:

19. Other Post Employment Benefits

Effective July 1, 2016 all members shall pay a sum of thirteen dollars and forty-seven ($13.47) cents bi-weekly for a total of three hundred and fifty ($350.00) dollars per year toward their OPEB (Other Post Employment Benefits). The City agrees that they will place these monies in a restricted account toward post retirement benefits.

Effective July 1, 2017 all members shall pay a sum of fifteen dollars and thirty-nine ($15.39) cents bi-weekly for a total of four hundred ($400.00) dollars per year toward their OPEB (Other Post Employment Benefits). The City agrees that they will place these monies in a restricted account toward post retirement benefits.

Effective July 1, 2018 all members shall pay a sum of seventeen dollars and thirty-one ($17.31) cents bi-weekly for a total of four hundred and fifty ($450.00) dollars per year toward their OPEB (Other Post Employment Benefits). The City agrees that they will place these monies in a restricted account toward post retirement benefits.

AWP 12/21/15 RWR

City L1363

TENTATIVE AGREEMENT JULY 1, 2016- JULY 1, 2019

(11.)p.55 **Section 21 - Medical Insurance, Dental Insurance, Life Insurance and Burial Expenses**

F. Retired Benefits:

21. Effective July 1, 2016 All retired employees who have become eligible for Medicare by reason of age, shall be allowed to purchase for their spouse, at no cost to the City including administrative costs, and at the retired member's expense, the active members' Blue Cross/Blue Shield or United Individual healthcare plan, or any healthcare plan agreed to by the parties at the City's rate, until such time as the spouse is eligible for Medicare by reason of age.

City L1363

TENTATIVE AGREEMENT JULY 1, 2016- JULY 1, 2019

(12.)p56 **Section 21.2 – Dental Insurance**

1. The maximum dollar ($) amount on Levels I, II, III, and IV shall be ~~two thousand ($2,000.00) dollars effective June 30, 2004.~~

   Effective January 1, 2015 the dollar amount shall increase to two thousand and five hundred ($2500.00) dollars per level.

   Effective July 1, 2018 the dollar amount shall increase to three thousand ($3000.00) dollars per level.

2. Effective July 1, 2016 all members enrolled in an individual plan shall pay the sum of two dollars ($2.00) bi-weekly for a total of fifty two dollars ($52.00) and any member who is enrolled in a family plan shall pay the sum of five dollars ($5.00) bi-weekly for a total of one hundred and thirty ($130.00) dollars per year toward their Dental Insurance.

AWF 12/21/15 City

L1363

TENTATIVE AGREEMENT JULY 1, 2016- JULY 1, 2019

(13.)p58 **Section 21. 4– Burial Insurance**

The City agrees to assume and pay for the funeral expenses for any employee killed in the line of duty; such payment, however, shall not exceed ten thousand ($10,000.00) dollars.

Effective July 1, 2016 the dollar amount shall shall not exceed twenty thousand ($20,000.00) dollars

AWC 12/2/15 City

L1363

TENTATIVE AGREEMENT JULY 1, 2016- JULY 1, 2019

(14)p 77. **Section 24.2 - Pension Payments**

5. Effective July 1, 2016 all civilian employees of the fire department will have the option of choosing a defined contribution plan (i.e., a 401(a) plan or equivalent) agreed to by the parties in lieu of the State Municipal Employees' Retirement Plan. Under the defined contribution plan, the City shall contribute 3% of the employees' annual salary into this plan. Employees enrolled in this plan shall contribute a minimum of 3% of the employees' annual compensation to be paid through payroll deduction. Employees may contribute additional funds to their account as allowed by the Internal Revenue Code. Any change to the plan shall be agreed to by the parties.

City L1363

TENTATIVE AGREEMENT JULY 1, 2016- JULY 1, 2019

(15.)p 65 **Section 24- Pension Payments**

~~3.~~ Current Language

~~4.~~ Current Language

3. All retired employees' pension payments will automatically escalate by three (3%) percent compounded on July 1, of each year, subject to that certain settlement agreement entered on or about December 13, 2013 in PC 2012-3590. The parties agree that the obligations set forth in said settlement agreement are incorporated herein as if more fully set forth, and the said obligations are thus contractual and not a mere recital.

4. Effective July 1, 2013 All active duty employees when retired shall have their pension payments adjusted, if necessary, to pension payments received by retired employees participating in the 2013 Pension Adjustment Agreement of similar rank or position and similar credited years of service at the time of their retirement.

AWF 12/2/15 City

L1363

(16.)p 88 **Section 34 – Duration of Agreement**

This Agreement is effective from July 1, ~~2013~~ 2016 and shall continue in full force and effect through midnight on June 30, ~~2016~~ 2019 If for any reason what so ever at the end of the term of this contract a new contract has not been agreed upon between Local 1363 (IAFF) and the City Of Cranston this contract will remain in effect until such time as a new contract is agreed upon.

AWF 12/2/15 City

L1363

Allan W. Fung
MAYOR

Lawrence J. DiBoni
DIRECTOR

DIVISION OF ECONOMIC DEVELOPMENT
CITY HALL
[illegible] PARK AVENUE
CRANSTON, RHODE ISLAND [illegible]

Date: December 7, 2015

To: Members of the City's Finance Committee

CC: Mayor Fung, Robert Coupe, Chris Rawson, Robert Strom

Ordinance: Ten Year Commercial Tax Incentive

Dear Members of the City's Finance Committee,

The following information is in support of JMDH Real Estate of Cranston, LLC (Restaurant Depot) of 15-24 132 Street College Point, NY 11356 to take advantage of the Ten Year Commercial Tax Incentive program.

The Ten Year Commercial Tax Phase-In Program is intended for businesses renovating an existing building with a minimum construction cost of greater than two million dollars ($2,000,000). The Restaurant Depot expansion and renovation consists of a 25,000 SF addition and renovation with a cost of $5,300,000.00. Restaurant Depot estimates they will be hiring an additional 20 new full time employees (over three years). This tax incentive is only intended for the increase on assessment of new taxes due to the expansion and renovation.

Restaurant Depot is a division of Jetro Holdings, Inc. and was founded in April, 1994. Their corporate headquarters are located in College Point, NY, with offices in Chicago, Los Angeles and Miami. On March 1, 1995 Jetro's first Restaurant Depot Warehouse opened in Plainview, NY. Currently, there are 110 locations throughout 33 states.

Restaurant Depot's mission is to offer one-stop savings, selection and service seven days a week for their primary customers, the small independent foodservice operator.

The City of Cranston is committed to attracting and retaining businesses and professional jobs. The Division of Economic Development, Planning Department, Tax Assessor and Building Inspections are in support of the Council granting this Tax Incentive.

Phone (401) 461-1000 Ext. 5 6.

Fax (401) 780-3179

Summary:

Applicant: JMDH Real Estate of Cranston, LLC (Restaurant Depot).

Employees: Restaurant Depot currently employs 65 fulltime employees and is planning to hire an additional 20 employees.

Building: 55,766 SF Total with an addition of 25,000 SF

Current Taxes: $85,897.00

Estimated Additional Tax by Tax Assessor: $40,000.00

Incentive Time Line: The incentive would allow the business to pay taxes on the building in increments of 10% each year for 10 years. The increments would be $4,000.00 per year.

Note: The incentive is based on the evaluation established by the City each year of the phase in and not the first year that it is established.

LAWRENCE J. DIBONI

DIRECTOR
Division of Economic Development

City of Cranston
869 Park Avenue
Cranston, RI 02910
(401) 780-3166
ldiboni@cranstonri.org

Allan W. Fung
MAYOR

Lawrence DiBoni
DIRECTOR

DEPARTMENT OF ECONOMIC DEVELOPMENT
CITY HALL
869 PARK AVENUE
CRANSTON, RHODE ISLAND 02910

Application Requesting

TAX INCENTIVE FOR COMMERCIALLY OR INDUSTRIALLY ZONED PROPERTY

1. Name & Address of Applicant: JMDH Real Estate of Cranston LLC
15-24 132 Street College Point NY 11356

2. Location of Property: 140 Kenwood Street 329 Niantic Ave Cranston RI 02910 Phone #: 718-559-4290

3. Assessor's Plat and Lot: Plat 7/3, Lot 3746, 3745, 3867, 3515

4. Name and Address of Occupant of the Proposed Construction (if different from the applicant):
RD America LLC 140 Kenwood Street Cranston RI 02910

5. Estimated Cost of New Construction: $ 3.2
(Attach pertinent documentation supporting estimate: contractor agreements, invoices)

6. Describe Proposed New Facility: # of stories 1 #of sq. ft./floors 79,000

Type of Construction: Concrete & Steel Panel Building with Steel Frame

Proposed Use of Facility: wholesale distribution of Restaurant supplies

7. Estimated Cost of Renovation/Expansion: $2.1 million
(Attach pertinent documentation supporting estimate)

8. Are Alterations/construction permitted under present zoning? Yes ✓ No ____

9. Current Number of Employees: 65 current employees

10. Future Anticipated number of employees: 85 in 3 years

11. Are taxes on the property current? yes

Application must be submitted before the issuance of the Certificate of Occupancy, from the Building Inspector, please forward your completed application to:

Lawrence DiBoni
Director of Economic Development
City of Cranston
869 Park Avenue
Cranston, RI 02910

Applications should be submitted two months prior to the issuance of the Certificate of Occupancy for processing and review of the application by City Council.

It is the understanding of the applicants) that the incentive, if approved, is applicable only for property constructed in commercially or industrially zoned sites, where the new construction or remodeling of existing facilities; that meet the approval of the building inspector, tax assessor, city planner or their designees, and the City Council; that all current and past taxes due by the applicants) must be paid in accordance with the rules set forth by the city ordinance; that the incentive would pertain to only that portion of the assessment attributable to the new construction or renovation of new facilities; that the incentive may be revoked in the event of fraud or misrepresentation by the applicants).

Under penalties of perjury I declare that I have examined this application to the best of my knowledge and belief it is true, correct and complete.

In Witness Whereof, I have hereunto set my hands this

4th day of May AD, 2015.

Signature of Applicant

Signed before me this 4th day of May AD, 2015 in the State of New York ~~Rhode Island~~, Queens County, and City of NY.

Notary Public

VALERIE R. KELLY
Notary Public, State of New York
No. 01KE4921463
Qualified in Queens County
Commission Expires February 29, 2018

My Commission Expires 2/28/2018.

Where Restaurants Shop®

15-24, 132nd Street, College Point, NY, 11356
((718) 559-4290, fax (775) 249-8123

Restaurant Depot, a division of Jetro Holdings, Inc, was founded in April, 1994. Our corporate headquarters are located in College Point, NY. We also have corporate offices in Chicago, Los Angeles, and Miami. On March 1, 1995, Jetro's first Restaurant Depot warehouse opened in Plainview, New York. As of May 1, 2015, there are 110 Restaurant Depot locations throughout Thirty-three states.

Restaurant Depot sells food and non-food products related to the foodservice industry. Among the more than 11,000 product offerings are dry groceries, condiments and dressings, baking products, beverages, fresh fish, fresh meats, fresh produce, dairy products and frozen foods. We also have an extensive line of smallwares, paper products, and disposables such as aluminum and plastic pans, wraps and containers. We also sell janitorial chemicals and restaurant equipment and supplies.

Our mission at Restaurant Depot is to offer one-stop for Savings, Selection, Service, Seven Days a Week,® for our primary customer, the small independent foodservice operator. The secondary market for Restaurant Depot includes caterers, bars, lunch wagons, institutions, civic, religious and social organizations. Our typical location is 60,000- 80,000 sq ft. We are set up as a distribution warehouse with a large dry warehouse area, as well as large refrigerated and frozen sections to store our perishable foods.

We sell strictly wholesale and are not open to the public. All customers are asked to provide a resale or tax exempt certificate upon signing up. After presenting the proper paperwork, they are given a free membership and are permitted to shop for all their needs. As a commitment to our customers business needs, we are open seven days a week. Our customers are also open seven days a week and must fill their stockrooms and kitchens weekly, rain or shine, regardless of outside conditions. As further commitment to our customers' needs, most locations offer a large covered area in our parking lot to help facilitate shopping in inclement weather.

We opened our Cranston location in June 0f 2003, and it was our 35th location. When we opened, we immediately discovered a real need in the market place for our services. The small independent restaurants were have trouble sourcing their products, making minimums from the large distributors, and having access to high quality food and supplies in the small quantities and competitive pricing that they needed. The large national restaurant chains were taking over the market. Over the next 10 years, we saw a steady resurgence of these small independent restaurants in the area. Now, with Restaurant Depot, they could not only survive, but also began to thrive. As they did, our business grew along with theirs and by 2011, we realized that we had outgrown our facility. We began looking for a new location with mixed emotions. We knew that we needed a larger facility, but also did not

want to leave the town of Cranston, where we have been successful and also a large part of the local foodservice community.

Luckily, some land became available, adjacent to our property which we purchased. We have now been working with the local municipality to expand our business so that we can stay in Cranston. It is only with the help of the Department of Economic Development that makes this project viable. We are very glad to be able to remain in Cranston, and hope for continued success.

Thank you for all your help during this process.

Site Layout Plan
Restaurant Depot

Larry Cohen

DiPrete Engineering

Engineers • Planners • Surveyors

Category	Contact Info-	Ordered BY	Total	Amou	nt Paid	Balance
Equipment Ordered						
Refrig Install includes Rigging Refrig/Electric	PIERCE	FOL	$ 178,896.00	$	119,263.00	$ 59,633.00
Indoor Light Fixtures	Cree - Erica Brim - (800) 236-7000 x5015 - Erica.Brim@cree.com	FOL	$ 34,542.21	$	34,542.21	$ -
Outdoor Light Fixtures	Cree - Erica Brim - (800) 236-7000 x5015 - Erica.Brim@cree.com	FOL	$ 7,095.67	$	6,973.47	$ -
Lighting Fixtures- to replace lost fixtures	Cree - Erica Brim - (800) 236-7000 x5015 - Erica.Brim@cree.com	FOL	$ 9,600.60	$	9,435.26	$ -
Extra Lighting Fixtures- box area and the tunnel area	Cree - Erica Brim - (800) 236-7000 x5015 - Erica.Brim@cree.com	FOL	$ 908.67	$	893.02	$ -
Air Curtains Package Install By GC	Powered Aire - Phil Rodenbaugh (724)588-3305 - philr@poweredaire.com	FOL	$ 6,334.00	$	6,334.00	$ -
Main Bi parting Enter/Exit and install	Besam - Pam Homyak- 609-249-9502 - Pam.Homyak@assaabloy.com	FOL	$ 17,019.00	$	17,019.00	$ -
HVAC Grainger order Install By GC	Grainger - Bobbie Monson (877)705-9507 - Bobbie.Monson@grainger-	FOL	$ 4,324.80	$	4,115.34	$ -
Drop box 4 way diffusers	AES Industries - George Lasher (800) 786-0402 - glasher@aescurb.com	FOL	$ 2,091.00	$	2,091.00	$ -
Split HVAC Units	Wallwork -Sharon Sylvestro (973)225-5200 - ssylvestro@wallworkgroup.com	FOL	$ 1,682.97	$	1,682.97	$ -
HVAC roof top units Install By GC - Trane	Trane- Faycal Sidhoum (973) 434-2177 - FAYCAL.SIDHOUM@TRANE.COM	FOL	$ 37,898.00	$	40,550.87	$ -
Generator	MTS- Barry Segal 631-750-6665 ext 100 - bsegal@mtspowersystems.com	FOL	$ 35,025.00	$	35,025.00	$ -
Greencheck Exhaust fans	ADE HVAC - Richard Arote (516) 568-6501 - rick@adehvac.com	FOL	$ 3,800.00	$	3,800.00	$ -
Electrical gear - building interior Installed BY GC/EC	Kysor Warren - John Hobbs (800)866-5596 - John.Hobbs@Heatcraftrpd.com , Nancy Mitchell - Nancy.Mitchell@Heatcraftrpd.com	FOL	ABOVE	ABOVE		
Meat Cases Installed by RIC (1 Meat Case)	Kysor Warren - John Hobbs (800)866-5596 - John.Hobbs@Heatcraftrpd.com , Nancy Mitchell - Nancy.Mitchell@Heatcraftrpd.com	FOL	$ 6,428.05	$	6,428.05	$ -
Refrigeration Equipment/Condensers Installed by RIC	Kysor Warren - John Hobbs (800)866-5596 - John.Hobbs@Heatcraftrpd.com , Nancy Mitchell - Nancy.Mitchell@Heatcraftrpd.com	FOL	$ 184,213.00	$	194,558.00	$ -
Refrigeration Evaporators installed by RIC	Kysor Warren - John Hobbs (800)866-5596 - John.Hobbs@Heatcraftrpd.com , Nancy Mitchell - Nancy.Mitchell@Heatcraftrpd.com	FOL	above			
Security Roll Down Doors and install	Overhead Door- Angel Burgess (469)-549-7121-	FOL	$ 23,098.00	$	23,098.00	$ -
Pallet Door	Overhead Door- Angel Burgess (469)-549-7121-	FOL	ABOVE	ABOVE		
Walk in panels and Install (FOR EXPANSION)	KPS - Kandi Herrington (817)231-0546- Kandi.Herrington@manitowoc.com	FOL	$ 261,203.05	$	165,065.94	$ 96,137.11
New planels to relocate OH Door in Freezer	KPS - Kandi Herrington (817)231-0546- Kandi.Herrington@manitowoc.com	FOL	$ 18,068.27	$	10,133.53	$ 7,934.74
(1) New Glass Reach in for Phase 1	Anthony Doors - John Hagerdorn (818)365-9451 -	FOL	$ 4,789.98	$	5,710.02	$ -
New Glass Reach in Door	Anthony Doors - John Hagerdorn (818)365-9451 -	FOL	$ 11,530.97	$	11,046.83	$ -
Additonal New Glas Reach in	Anthony Doors - John Hagerdorn (818)365-9451 -	FOL	$ 2,737.13		$0.00	$2,737.13
Night Doors at Cooler Main Openings and	Overhead Door- Angel Burgess (469)-549-7121-	FOL	$ 4,925.75	$	4,925.75	$ -
Ice Machine Installed by RIC	Howe - Alexandra Pawlikowski (773)235-0200 ext. 127 -	FOL	$ 19,219.49	$	18,596.95	$ -
Perishable Receiving Doors and install	Arbon- Paul Papapetrou (551)804-7667- PPapapetrou@ritehite.com	FOL	$ 30,942.00	$	30,942.00	$ -
Fastrax Freezer Door	Arbon- Paul Papapetrou (551)804-7667- PPapapetrou@ritehite.com	FOL	$ 21,840.00	$	-	$ 21,840.00
Dock Levelers	Power Ramp	FOL	$ 46,984.00	$	-	$ 46,984.00
Dock seals	Power Ramp	FOL	ABOVE	ABOVE		
Dock Lights	Power Ramp	FOL	ABOVE	ABOVE		
Extra Dock Modification	Power Ramp	FOL	$ 1,435.00	$	-	$ 1,435.00
Vinyl Strip Doors (8'x12')	Cool Curtain - Randy Wall (877)768-0722- Ricardo@CoolCurtain.com	FOL	$ 3,375.00	$	-	$ 3,375.00
			$ 980,007.61	$	752,230.21	$ 240,075.98

Construction Management & Builders, Inc.

Restaurant Depot - Joint Check Tracking

CSI Division	Subcontractor	Total Contract Value	Joint Check Req #1	Joint Check Req #2	Joint Check Req #3	Joint Check Req #4	Joint Check Req #5	Joint Check Req #6
Sitework	Narragansett Improvement Company	$328,676	$9,000	$34,740	$43,650.00	$62,618.40	$52,290.00 ✓	$44,154.00
Structural Steel	Heavy Metal Corp.(contract voided)	$260,000						
Structural Steel	Structural Systems Inc.	$227,531				$44,550.00	$115,011.00 ✓	$19,654.20
Roofing System								
Drywall/Framing								
Fire Protection								
Plumbing								
Electrical	Reilly Electrical Contractors, Inc.	$179,658	$2,250	$6,300	$37,243.80	$48,565.80	$34,470.00 ✓	$21,342.60

3/9/2015

Restaurant Depot - Cranston, RI

Providence County, Cranston, Rhode Island

	6/30/2014 BUDGET	ADJUSTMENTS	REVISED BUDGET	Sq. Ft. Cost	Previous Draws	January Draw	TOTAL TO DATE	BALANCE TO COMPL
DUE DILIGENCE								
REIMBURSABLES	$ 25,000.00	$ -	$ 25,000.00	0.31	$ 7,523.54	$ -	$ 7,523.54	$ 17,476.46
	$ 25,000.00	$ -	$ 25,000.00	0.31	$ 7,523.54	$ -	$ 7,523.54	$ 17,476.46
CONSTRUCTION								
SHELL CONSTRUCTION	$ 2,750,868.37	$ 519,374.39	$ 3,270,242.76	41.20	$ 2,027,977.55	$ 658,998.16	$ 2,686,975.71	$ 583,267.05
OWNER EQUIPMENT (ESTIMATE)	Not Included							
	$ 2,750,868.37	$ 519,374.39	$ 3,270,242.76	41.20	$ 2,027,977.55	$ 658,998.16	$ 2,686,975.71	$ 583,267.05
CONTINGENCY	$ 100,000.00	$ (100,000.00)	$ -	0.00	$ -	$ -	$ -	$ -
LANDSCAPING	Included in Shell							
SOFT COSTS								
QUALITY ASSURANCE	$ 22,500.00	$ 7,500.00	$ 30,000.00	0.38	$ 28,112.93	$ -	$ 28,112.93	$ 1,887.07
	$ 22,500.00	$ 7,500.00	$ 30,000.00	0.38	$ 28,112.93	$ -	$ 28,112.93	$ 1,887.07
TOTAL PROJECT COST	$ 2,898,368.37	$ 426,874.39	$ 3,325,242.76	$ 41.90	$ 2,063,614.02	$ 658,998.16	$ 2,722,612.18	$ 602,630.58
BUILDING SQUARE FOOT	79,367							
COST PER SQUARE FOOT	$ 41.90							

Paid
phase I

CONTINUATION SHEET

Application and Certification for Payment, containing
Contractor's signed certification is attached.
In tabulations below, amounts are stated to the nearest dollar.
Use Column I on Contracts where variable retainage for line items may apply.

ADJUSTED TO OWNER'S PAYMENT

Application No. : 8
Application Date : 1/19/2016
To: 1/31/2016
Architect's Project No.:

Invoice # : 14018-08 Contract : 14018B-01 Restaurant Depot Cranston RI

A Item No.	B Description of Work	C Scheduled Value	D Work Completed From Previous Application (D+E)	E Work Completed This Period In Place	F Materials Presently Stored (Not in D or E)	G Total Completed and Stored To Date (D+E+F)	% (G / C)	H Balance To Finish (C-G)	I Retainage
1000	Site - Demolition	10,255.00	10,255.00	0.00	0.00	10,255.00	100.00%	0.00	1,025.50
1010	Site - Earthwork	147,510.00	147,510.00	0.00	0.00	147,510.00	100.00%	0.00	14,751.00
1020	Site - Utilities	137,713.00	137,713.00	0.00	0.00	137,713.00	100.00%	0.00	13,771.31
1030	Site - Asphalt Paving	115,502.00	109,726.90	0.00	0.00	109,726.90	95.00%	5,775.10	10,972.69
1040	Site - Concrete Curbing	36,250.00	7,000.00	0.00	0.00	7,000.00	19.31%	29,250.00	700.00
1050	Site - Fencing & Gates	19,725.00	1,900.00	0.00	0.00	1,900.00	9.63%	17,825.00	190.00
1060	Site - Landscaping	14,360.00	0.00	0.00	0.00	0.00	0.00%	14,360.00	0.00
1070	Building - Demolition	46,000.00	0.00	20,000.00	0.00	20,000.00	43.48%	26,000.00	2,000.00
1080	Building - Foundations	123,690.00	123,690.00	0.00	0.00	123,690.00	100.00%	0.00	12,369.00
1090	Building - Floor Slab	168,301.00	168,301.00	0.00	0.00	168,301.00	100.00%	0.00	16,830.09
1100	Building - Masonry	73,265.00	65,938.50	0.00	0.00	65,938.50	90.00%	7,326.50	6,593.85
1110	Building - Structural Steel	456,732.00	440,455.90	0.00	0.00	440,455.90	96.44%	16,276.10	44,045.59
1120	Building - Exterior Insulated Metal Panels	106,000.00	101,060.04	0.00	0.00	101,060.04	95.34%	4,939.96	10,106.00
1130	Building - Rough Carpentry	158,792.00	92,518.89	55,157.67	0.00	147,676.56	93.00%	11,115.44	14,767.66
1140	Building - Finish Carpentry	17,255.00	0.00	17,255.00	0.00	17,255.00	100.00%	0.00	1,725.50
1150	Building - Roofing System	178,350.00	150,559.99	11,139.97	0.00	161,699.98	90.66%	16,650.04	16,170.00
1160	Building - Caulking & Sealants	15,014.00	15,014.00	0.00	0.00	15,014.00	100.00%	0.00	1,501.40
1170	Building - Int & Ext Man Doors, Frames & Hardw	11,250.00	3,937.50	7,312.50	0.00	11,250.00	100.00%	0.00	1,125.00
1180	Building - Flooring Finishes	6,846.00	6,846.00	0.00	0.00	6,846.00	100.00%	0.00	684.60
1190	Building - Painting	62,182.00	14,036.40	48,145.60	0.00	62,182.00	100.00%	0.00	6,218.20
1200	Building - Toilet Partitions & Accessories	6,590.00	0.00	6,590.00	0.00	6,590.00	100.00%	0.00	659.00
1210	Building - Miscellaneous Specialties	2,993.00	0.00	2,993.00	0.00	2,993.00	100.00%	0.00	299.30
1220	Building - Plumbing	79,000.00	74,400.00	0.00	0.00	74,400.00	94.18%	4,600.00	7,440.00
1230	Building - Fire Protection	131,500.00	85,715.00	6,335.00	0.00	92,050.00	70.00%	39,450.00	9,205.00
1240	Building - HVAC	35,900.00	35,000.00	0.00	0.00	35,000.00	97.49%	900.00	3,500.00
1250	Building - Electrical	193,408.00	34,462.24	97,055.20	0.00	131,517.44	68.00%	61,890.56	13,151.74
1260	Supervision	184,770.00	158,370.00	26,400.00	0.00	184,770.00	100.00%	0.00	18,477.00
1270	General Conditions	75,945.00	65,094.00	10,851.00	0.00	75,945.00	100.00%	0.00	7,594.50
1280	Fee	110,185.00	94,456.40	15,728.60	0.00	110,185.00	100.00%	0.00	11,018.50
1290	Alternate #2 - Bird Screen below canopy framing	25,605.37	0.00	0.00	0.00	0.00	0.00%	25,605.37	0.00
2001	Change Order #01 - PCO#02- Remove Isles in F	2,043.56	2,043.56	0.00	0.00	2,043.56	100.00%	0.00	204.36
2002	Change Order #02 - PCO#05 - Existing Septic T.	1,596.57	1,596.57	0.00	0.00	1,596.57	100.00%	0.00	159.66

CONTINUATION SHEET

Application and Certification for Payment, containing
Contractor's signed certification is attached.
In tabulations below, amounts are stated to the nearest dollar.
Use Column I on Contracts where variable retainage for line items may apply.

ADJUSTED TO OWNER'S PAYMENT

Application No. : 8
Application Date : 1/19/2015
To: 1/31/2015
Architect's Project No.:

Invoice # : 14018-08 Contract : 14018B-01 Restaurant Depot Cranston RI

A Item No.	B Description of Work	C Scheduled Value	D Work Completed From Previous Application (D+E)	E Work Completed This Period In Place	F Materials Presently Stored (Not in D or E)	G Total Completed and Stored To Date (D+E+F)	% (G / C)	H Balance To Finish (C-G)	I Retainage
2003	Change Order #03 - PCO#06 - Underground Co	647.35	647.35	0.00	0.00	647.35	100.00%	0.00	64.74
2004	Change Order #03 - PCO#04 - Modifications for	3,036.80	3,036.80	0.00	0.00	3,036.80	100.00%	0.00	303.68
2005	Change Order #05 - PCO#32 - Additional Work p	12,205.01	12,205.01	0.00	0.00	12,205.01	100.00%	0.00	1,220.50
2006	Change Order #06 - PCO#18 - Proposed Gravel	25,266.01	25,266.01	0.00	0.00	25,266.01	100.00%	0.00	2,526.60
2007	Change Order #07 - PCO#37 - Concrete Curbing	-13,662.00	-13,662.00	0.00	0.00	-13,662.00	100.00%	0.00	-1,366.20
2008	Change Order #08 - PCO#16 - Additional Masor	1,178.43	1,178.43	0.00	0.00	1,178.43	100.00%	0.00	117.84
2009	Change Order #09 - PCO#31 - Revised Fire Alar	54,450.00	54,450.00	0.00	0.00	54,450.00	100.00%	0.00	5,445.00
2010	Change Order #10 - PCO#55 - Revision #10, Ele	13,005.30	13,005.30	0.00	0.00	13,005.30	100.00%	0.00	1,300.53
2011	Change Order #11 - PCO#35 - Excavation to Su	2,337.72	2,337.72	0.00	0.00	2,337.72	100.00%	0.00	233.77
2012	Change Order #12 - PCO#47 - Sanitary Sewer T	1,240.25	1,240.25	0.00	0.00	1,240.25	100.00%	0.00	124.03
2013	Change Order #13 - PCO#48 - Framing per RFI	904.40	904.40	0.00	0.00	904.40	100.00%	0.00	90.44
2014	Change Order #14 - PCO#41 - Rev. Canopy Ro	2,750.00	0.00	0.00	0.00	0.00	0.00%	2,750.00	0.00
2015	Change Order #15 - PCO#51 - Existing Foundat	5,118.30	5,118.30	0.00	0.00	5,118.30	100.00%	0.00	511.83
2016	Change Order #16 - PCO#38 - Phase One Plans	393,590.56	0.00	393,590.56	0.00	393,590.56	100.00%	0.00	39,359.06
2017	Change Order #17 - PCO#63 - Gas Valve / Gen	~~2,901.46~~ 1,639.91	0.00	~~2,901.45~~ 1,639.91	0.00	2,901.45	100.00%	0.00	290.15
2018	Change Order #18 - PCO#64 - Floor Plan Modifi	7,148.43	0.00	7,148.43	0.00	7,148.43	100.00%	0.00	714.84
2019	Change Order #19 - PCO#66 - Tele-Data Rack	530.66	0.00	530.66	0.00	530.66	100.00%	0.00	53.07
2020	Change Order #20 - PCO#68 - Additional Light E	2,953.50	0.00	2,953.50	0.00	2,953.50	100.00%	0.00	295.35
2021	Change Order #21 - PCO#71 - Electrical Demo	1,395.63	0.00	1,395.63	0.00	1,395.63	100.00%	0.00	139.56
	Grand Totals	3,271,504.30	2,253,308.46	733,481.77	0.00	2,986,790.23	91.30%	284,714.07	298,679.05

KBE Building Corporation

30 Batterson Park Road
Farmington, CT 06032

RESTAURANT DEPOT

140 Kenwood Street
Cranston, RI

Project # 14018B-01

Period thru : 1/31/15

Subcontractor/Supplier	Total Contract Price	Change Order	Adjusted Contract Price	Amount Already Paid	Amount Currently Owing	Retention	Balance to Complete
A & M Electrical	$ 108,000.00	$ 44,002.22	$ 152,002.22	$ 85,260.00	$ 38,281.93	$ 18,460.29	$ 28,460.29
Brookside Co.	$ 108,000.00	$ -	$ 108,000.00	$ 87,870.00	$ -	$ 13,130.10	$ 20,130.00
C & E Concrete	$ 123,800.00	$ (120,439.18)	$ 3,360.82	$ 14,580.00	$ -	$ -	$ (11,219.18)
Energy Electric Co.l	$ 179,000.00	$ 250,697.00	$ 429,697.00	$ 31,421.25	$ 266,061.60	$ 33,053.65	$ 132,214.15
Heavy Metal Corp	$ 455,000.00	$ (58,193.62)	$ 396,806.38	$ 341,449.41	$ -	$ 37,938.82	$ 55,356.97
Northern Site Contractors	$ 409,000.00	$ 35,214.92	$ 444,214.92	$ 352,740.15	$ -	$ 39,193.35	$ 91,474.77
New Century Roofing	$ 179,900.00	$ 25,570.81	$ 205,470.81	$ 140,879.00	$ 11,709.22	$ 16,932.03	$ 53,082.59
New England Fire Systems	$ 129,000.00	$ 43,807.78	$ 172,807.78	$ 85,695.00	$ 43,767.77	$ 19,345.01	$ 43,345.01
South Dartmouth Cons.	$ 135,025.00	$ 30,674.03	$ 165,699.03	$ 90,144.46	$ 48,140.11	$ 20,663.21	$ 27,414.46
	$ -	$ -	$ -	$ -	$ -	$ -	$ -
	$ -	$ -	$ -	$ -	$ -	$ -	$ -

Subtotal:	$	407,960.63	
Payment to KBE Building Corp.	$	252,~~172.95~~	251,037.53
TOTAL:	$	660,~~133.58~~	658,998.16

Restaurant Depot - Cranston, RI

Providence County, Cranston, Rhode Island

	6/30/2014 BUDGET	ADJUSTMENTS	CHANGE ORDERS	REVISED BUDGET	Sq. Ft. Cost	Previous Draws	September Draw	TOTAL TO DATE	BALANCE TO COMPL
DUE DILIGENCE									
REIMBURSABLES	$ 25,000.00	$ -	$ -	$ 25,000.00	0.31	$ 22,987.38	$ -	$ 22,987.38	$ 2,012.62
	$ 25,000.00	$ -	$ -	$ 25,000.00	0.31	$ 22,987.38	$ -	$ 22,987.38	$ 2,012.62
CONSTRUCTION									
SHELL CONSTRUCTION (KBE)	$ 2,750,868.37	$ 519,374.39	$ -	$ 3,270,242.76	41.20	$ 2,686,975.71	$ -	$ 2,686,975.71	$ 583,267.05
SHELL CONSTRUCTION (CMB)	-	2,184,399.00	62,452.00	2,246,851.00	28.31	1,506,790.11	238,422.45	1,745,212.56	501,638.44
OWNER EQUIPMENT (ESTIMATE)	Not Included								
	$ 2,750,868.37	$ 2,703,773.39	$ 62,452.00	$ 5,517,093.76	69.51	$ 4,193,765.82	$ 238,422.45	$ 4,432,188.27	$ 1,084,905.49
CONTINGENCY	$ 100,000.00	$ (100,000.00)	$ -	$ -	0.00	$ -	$ -	$ -	$ -
LANDSCAPING	Included in Shell								
SOFT COSTS									
QUALITY ASSURANCE	$ 22,500.00	$ 15,000.00	$ -	$ 37,500.00	0.47	$ 31,376.94	$ -	$ 31,376.94	$ 6,123.06
	$ 22,500.00	$ 15,000.00	$ -	$ 37,500.00	0.47	$ 31,376.94	$ -	$ 31,376.94	$ 6,123.06
TOTAL PROJECT COST	$ 2,898,368.37	$ 2,618,773.39	$ 62,452.00	$ 5,579,593.76	$ 70.30	$ 4,248,130.14	$ 238,422.45	$ 4,486,552.59	$ 1,093,041.17
BUILDING SQUARE FOOT	79,367								
COST PER SQUARE FOOT	$ 70.30								

Paid I & Phase II

Balance to complete

CONTINUATION SHEET

AIA DOCUMENT G703

AIA Document G702, APPLICATION AND CERTIFICATION FOR PAYMENT, containing
Contractor's signed certification is attached.
In tabulations below, amounts are stated to the nearest dollar.
Use Column I on Contracts where variable retainage for line items may apply.

APPLICATION NO: 6
APPLICATION DATE: 9/30/2015
PERIOD TO: 9/30/2015
ARCHITECT'S PROJECT NO: 15061

A	B	C	D	E	F	G		H	I
ITEM NO.	DESCRIPTION OF WORK	SCHEDULED VALUE	WORK COMPLETED FROM PREVIOUS APPLICATION (D + E)	WORK COMPLETED THIS PERIOD	MATERIALS PRESENTLY STORED (NOT IN D OR E)	TOTAL COMPLETED AND STORED TO DATE (D+E+F)	% (G ÷ C)	BALANCE TO FINISH (C - G)	RETAINAGE (IF VARIABLE RATE)
Div 1	General Conditions	$36,087	$24,057	$3,290		$27,347	76%	$8,740	$1,367
01105	Blueprinting/Photocopying	$5,250	$4,463	$250		$4,713	90%	$537	$236
01210	First Aid	$350	$300	$25		$325	93%	$25	$16
01220	Safety Inspections/Loss Control Services	$4,375	$2,844	$975		$3,819	87%	$556	$191
01230	Temporary Fire Extinguishers	$980	$980	$0		$980	100%	$0.00	$49
01310	Field Office Expenses	$16,557	$10,762	$1,015		$11,777	71%	$4,780	$589
01370	Temporary Toilets	$5,775	$2,888	$575		$3,463	60%	$2,312	$173
01550	Postage/ Overnight/Courier	$2,800	$1,820	$450		$2,270	81%	$530	$114
Div 2	Demolition	$86,225	$71,721	$10,219		$81,940	95%	$4,285	$4,097
02220	Select Demolition	$42,500	$38,075	$2,500		$40,575	95%	$1,925	$2,029
02220	Concrete Slab Removal	$26,125	$22,206	$3,919		$26,125	100%	$0.00	$1,306
02220	Dumpsters	$17,600	$11,440	$3,800		$15,240	87%	$2,360	$762
Div 2	Sitework	$356,035	$206,931	$56,540		$263,471	74%	$92,564	$13,174
02300	Sitework	$314,724	$173,100	$49,060		$222,160	71%	$92,564	$11,108
02300	Survey Services	$4,200	$2,500	$1,700		$4,200	100%	$0.00	$210
02820	Fencing	$23,120	$17,340	$5,780		$23,120	100%	$0.00	$1,156
02820	Temporary Fence	$13,991	$13,991	$0		$13,991	100%	($0)	$700
Div 3	Concrete	$208,127	$184,041	$7,135		$191,176	92%	$16,951	$9,559
03050	Concrete Materials	$92,249	$78,412	$4,820		$83,232	90%	$9,017	$4,162
03110	Concrete Foundations	$31,400	$31,400	$0		$31,400	100%	$0.00	$1,570
03150	Concrete Accessories	$6,959	$6,244	$715		$6,959	100%	$0.00	$348
03210	Reinforcing Steel/Mesh	$14,242	$14,242	$0		$14,242	100%	$0.00	$712
03300	Concrete Slabs	$63,277	$53,743	$1,600		$55,343	87%	$7,934	$2,767
Div 4	Masonry	$28,927	$25,427	$0		$25,427	88%	$3,500	$1,271
04200	Masonry	$28,927	$25,427	$0		$25,427	88%	$3,500	$1,271
Div 5	Metals	$221,794	$221,794	$0		$221,794	100%	$0.00	$11,090
05120	Structural Steel	$221,794	$221,794	$0		$221,794	100%	$0.00	$11,090

AIA DOCUMENT G703 · CONTINUATION SHEET FOR G702 · 1992 EDITION · AIA® · © 1992
THE AMERICAN INSTITUTE OF ARCHITECTS, 1735 NEW YORK AVENUE, N.W., WASHINGTON, D.C. 20006-5292

CONTINUATION SHEET

AIA DOCUMENT G703

AIA Document G702, APPLICATION AND CERTIFICATION FOR PAYMENT, containing
Contractor's signed certification is attached.
In tabulations below, amounts are stated to the nearest dollar.
Use Column I on Contracts where variable retainage for line items may apply.

APPLICATION NO: 6
APPLICATION DATE: 9/30/2015
PERIOD TO: 9/30/2015
ARCHITECT'S PROJECT NO: 15061

A ITEM NO.	B DESCRIPTION OF WORK	C SCHEDULED VALUE	D WORK COMPLETED FROM PREVIOUS APPLICATION (D + E)	E WORK COMPLETED THIS PERIOD	F MATERIALS PRESENTLY STORED (NOT IN D OR E)	G TOTAL COMPLETED AND STORED TO DATE (D+E+F)	% (G ÷ C)	H BALANCE TO FINISH (C - G)	I RETAINAGE (IF VARIABLE RATE)
Div 6	Carpentry & General Labor	$84,674	$51,950	$15,750		$67,700	80%	$16,974	$3,385
06030	Job Cleanup & Laborer	$59,200	$38,480	$8,950		$47,430	80%	$11,770	$2,372
06040	Final Job Cleaning	$8,626	$0	$4,300		$4,300	50%	$4,326	$215
06050	Equipment Rentals	$6,793	$4,415	$1,500		$5,915	87%	$878	$296
06400	Millwork & Architectural Woodwork	$10,055	$9,055	$1,000		$10,055	100%	$0.00	$503
Div 7	Thermal & Moisture Protection	$92,150	$35,075	$36,675		$71,750	78%	$20,400	$3,588
07410	Insulated Metal Panels	$46,750	$35,075	$11,675		$46,750	100%	$0.00	$2,338
07500	Membrane Roofing	$37,400	$0	$25,000		$25,000	67%	$12,400	$1,250
07920	Sealants & Caulking	$8,000	$0	$0			0%	$8,000	$0
Div 8	Doors & Windows	$11,166	$11,166	$0		$11,166	100%	$0.00	$558
08100	Doors, Frames & Hardware	$9,791	$9,791	$0		$9,791	100%	$0.00	$490
08400	Aluminum Storefront	$1,375	$1,375	$0		$1,375	100%	$0.00	$69
Div 9	Finishes	$161,929	$114,474	$26,249		$140,723	87%	$21,206	$7,036
09250	Drywall & Metal Framing	$75,040	$67,609	$4,500		$72,109	96%	$2,931	$3,605
09510	Acoustical Ceilings	$4,402	$3,500	$902		$4,402	100%	$0.00	$220
09650	VCT & Resilient Flooring	$9,262	$6,915	$2,347		$9,262	100%	$0.00	$463
09910	Painting	$73,225	$36,450	$18,500		$54,950	75%	$18,275	$2,748
Div 10	Specialties	$30,537	$30,537	$0		$30,537	100%	$0.00	$1,527
10260	Wall and Corner Guards	$1,145	$1,145	$0		$1,145	100%	$0.00	$57
10605	Bird Screening	$27,905	$27,905	$0		$27,905	100%	$0.00	$1,395
10800	Toilet Partitions & Accessories	$1,487	$1,487	$0		$1,487	100%	$0.00	$74
Div 15	Mechanical	$192,770	$65,040	$29,200		$94,240	49%	$98,530	$4,712
15300	Fire Protection	$78,610	$19,675	$11,500		$31,175	40%	$47,435	$1,559
15400	Plumbing	$79,000	$22,365	$13,500		$35,865	45%	$43,135	$1,793
15700	HVAC	$35,160	$23,000	$4,200		$27,200	77%	$7,960	$1,360

AIA DOCUMENT G703 · CONTINUATION SHEET FOR G702 · 1992 EDITION · AIA® · © 1992
THE AMERICAN INSTITUTE OF ARCHITECTS, 1735 NEW YORK AVENUE, N.W., WASHINGTON, D.C. 20006-5292

CONTINUATION SHEET

AIA DOCUMENT G703

AIA Document G702, APPLICATION AND CERTIFICATION FOR PAYMENT, containing Contractor's signed certification is attached.
In tabulations below, amounts are stated to the nearest dollar.
Use Column I on Contracts where variable retainage for line items may apply.

APPLICATION NO: 6
APPLICATION DATE: 9/30/2015
PERIOD TO: 9/30/2015
ARCHITECT'S PROJECT NO: 15061

A	B	C	D	E	F	G		H	I
ITEM NO.	DESCRIPTION OF WORK	SCHEDULED VALUE	WORK COMPLETED FROM PREVIOUS APPLICATION (D + E)	WORK COMPLETED THIS PERIOD	MATERIALS PRESENTLY STORED (NOT IN D OR E)	TOTAL COMPLETED AND STORED TO DATE (D+E+F)	% (G ÷ C)	BALANCE TO FINISH (C - G)	RETAINAGE (IF VARIABLE RATE)
Div 16	Electrical	$136,800	$90,382	$23,714		$114,096	83%	$22,704	$5,705
16100	Electrical	$136,800	$90,382	$23,714		$114,096	83%	$22,704	$5,705
Div 17	cm&b Supervision	$279,781	$182,916	$26,952		$209,868	75%	$69,913	$10,493
17020	Project Supervision	$144,763	$94,632	$13,940.00		$108,572	75%	$36,191	$5,429
17110	Project Accountant	$6,900	$4,515	$660.00		$5,175	75%	$1,725	$259
17130	Project Administration	$7,360	$4,810	$710.00		$5,520	75%	$1,840	$276
17210	Project Estimating	$7,130	$4,665	$715.00		$5,380	75%	$1,750	$269
17230	Project Manager	$72,185	$47,198	$6,941.00		$54,139	75%	$18,046	$2,707
17240	Project Executive	$41,443	$27,097	$3,986.00		$31,083	75%	$10,360	$1,554
Div 1	Allowances	$130,500	$120,207	$0		$120,207	92%	$10,293	$6,010
01160	Temporary Partitions Allowance	$11,000	$7,332	$0		$7,332	67%	$3,668	$367
01166	Temporary Shoring & Underpinning Allow.	$75,000	$75,000	$0		$75,000	100%	$0.00	$3,750
01171	Landscaping Allowance	$44,500	$37,875	$0		$37,875	85%	$6,625	$1,894
Div 1	Insurance & Fee	$126,898	$87,925	$15,247		$103,172	81%	$23,726	$5,159
01030	Contractor's Insurance	$20,975	$15,897	$2,536		$18,433	88%	$2,542	$922
01060	OH & P	$105,924	$72,028	$12,711		$84,739	80%	$21,184	$4,237
	CHANGE ORDERS								
CO #1	Parking Lot Rework (Phase I Area)	$14,049	$14,049	$0		$14,049	100%	$0.00	$702
CO #1	Quad Outlets at Offices	$652	$652	$0		$652	100%	$0.00	$33
CO #1	Hand Dryers at Restrooms	$5,378	$5,378	$0		$5,378	100%	$0.00	$269
	TOTAL	$20,079	$20,079	$0		$20,079	100%	$0.00	$1,004
CO #2	Repair Phase I Sewer Work	$18,095	$18,095	$0		$18,095	100%	$0.00	$905
CO #2	Work Completed in Phase I	($19,962)	($19,962)	$0		($19,962)	100%	$0.00	($998)
CO #2	PPC Electric Panel Installation	$46,608	$46,608	$0		$46,608	100%	$1	$2,330
CO #2	Install Missing Landscape Island	$2,906	$2,906	$0		$2,906	100%	$0.00	$145
CO #2	Jet and Camera the Phase I Sewer Line	$2,933	$2,933	$0		$2,933	100%	$0.00	$147
CO #2	Power for Temporary Shrimp Cases	$7,486	$7,486	$0		$7,486	100%	$0.00	$374
CO #2	Extend Loading Dock Slab to 60'	$952	$952	$0		$952	100%	$0.00	$48

AIA DOCUMENT G703 · CONTINUATION SHEET FOR G702 · 1992 EDITION · AIA® · ©1992
THE AMERICAN INSTITUTE OF ARCHITECTS, 1735 NEW YORK AVENUE, N.W., WASHINGTON, D.C. 20006-5292

CONTINUATION SHEET

AIA DOCUMENT G703

AIA Document G702, APPLICATION AND CERTIFICATION FOR PAYMENT, containing
Contractor's signed certification is attached.
In tabulations below, amounts are stated to the nearest dollar.
Use Column I on Contracts where variable retainage for line items may apply.

APPLICATION NO: 6
APPLICATION DATE: 9/30/2015
PERIOD TO: 9/30/2015
ARCHITECT'S PROJECT NO: 15061

A	B	C	D	E	F	G		H	I
ITEM NO.	DESCRIPTION OF WORK	SCHEDULED VALUE	WORK COMPLETED FROM PREVIOUS APPLICATION (D + E)	WORK COMPLETED THIS PERIOD	MATERIALS PRESENTLY STORED (NOT IN D OR E)	TOTAL COMPLETED AND STORED TO DATE (D+E+F)	% (G ÷ C)	BALANCE TO FINISH (C - G)	RETAINAGE (IF VARIABLE RATE)
CO #2	Concrete Apron Outside Pallet Door	$557	$557	$0		$557	100%	$0.00	$28
CO #2	Plywood Wainscot at New Wall	$2,069	$2,069	$0		$2,069	100%	$0.00	$103
CO #2	Replace Entire Receiving Slab	$51,704	$51,704	$0		$51,704	100%	$0.00	$2,585
CO #2	Existing receiving Foundation to Remain	($18,127)	($18,127)	$0		($18,127)	100%	$0.00	($906)
	TOTAL	$95,220	$95,220	$0		$95,220	100%	$0.00	$4,761
CO #3	Add Bollards at Pallet Door	$2,153	$2,153	$0		$2,153	100%	$0.00	$108
	TOTAL	$2,153	$2,153	$0		$2,153	100%	$0.00	$108
CO #4	Allowance Adjustment for Temporary Shoring	($55,000)	-$55,000	$0		($55,000)	100%	$0.00	($2,750)
	TOTAL	($55,000)	($55,000)	$0		($55,000)	100%	$0.00	($2,750)
	GRAND TOTALS	$2,246,851	$1,586,095	$250,971	$0	$1,837,066	82%	$409,785	$91,853

Users may obtain validation of this document by requesting of the license a completed AIA Document D401 - Certification of Document's Authenticity

THE CITY OF CRANSTON

RESOLUTION OF THE CITY COUNCIL

AUTHORIZING REAL ESTATE/TANGIBLE TAX ABATEMENTS AS RECOMMENDED BY CITY ASSESSOR

No. 2016-3

Passed:
January 25, 2016

John E. Lanni, Jr., Council President

Resolved, That

The request of the City Assessor for the following abatements for manifest errors and reasons therein stated be granted and that a certified copy of this Resolution be for the respective amounts a sufficient voucher for the City Treasurer.

(See attached list of Abatements)

ALLAN FUNG
MAYOR

DIVISION OF ASSESSMENT
869 PARK AVE
CRANSTON, RI 02910

SALVATORE SACCOCCIO JR.
CITY ASSESSOR

DAVID COLE
DEPUTY ASSESSOR

MEMO

DATE: January 6, 2016

TO: His Honor the Mayor and the Honorable City Council

FROM: City Assessor

RE: Real Estate and Tangible Abatements

The following assessments are recommended for abatement in the amounts and for the reasons hereinafter set forth.

Assessment Date	Value	Tax
December 31, 2014	189,416	5,500.64
December 31, 2013	58,247	1,995.54
December 31, 2012	48,297	1,654.65
December 31, 2011	26,066	893.02
December 31, 2010	21,666	658.41
December 31, 2009	20,266	594.59
Totals:	363,958	11,296.85

Salvatore Saccoccio, Jr
City Assessor

City of Cranston
2015 Abatement List

1 0230743501 990-2307-435
Location 786 ATWOOD AV
BALLETTO'S REALTY
CHRISTINA BALLETTO
786 ATWOOD AVE
CRANSTON RI 02920-2505

	Value	Tax
Original :	10000	336.80
LISTING ERROR :	10000	336.80
Adjusted :		

2 0814423501 990-8144-235
Location 1370 SCITUATE AV
HENRY WASTE DISPOSAL
WALTER HENRY
1370 SCITUATE AVE
CRANSTON RI 02921

	Value	Tax
Original :	17853	601.28
OUT OF BUSINES :	17853	601.29
Adjusted :		-.01

3 1313736001 012-1574
Location 20 CLARK AV
LOBUONO JOSEPHINE LIFE ESTATE
20 CLARK AVENUE
CRANSTON RI 02920

	Value	Tax
Original :	224000	5028.80
LISTING ERROR :	14500	325.53
Adjusted :	209500	4703.27

4 1429288002 018-1509
Location 387 NATICK AV
MESSORE EUGENIO & WF PASQUALIN
387 NATICK AVENUE
CRANSTON RI 02921

	Value	Tax
Original :	242500	5444.12
Exemption Omit :	23909	536.76
Adjusted :	218591	4907.36

5 1422134001 018-0611
Location 57 WOODLAWN DR
MORELLI LOUIS & WF JOSEPHINE J
57 WOODLAWN DRIVE
CRANSTON RI 02920

	Value	Tax
Original :	143491	3221.36
Exemption Omit :	7972	178.97
Adjusted :	135519	3042.39

6 1718294001 037-0700
Location 30 WESTFIELD DR
PULCINI ANTONIO G ESTATE
30 WESTFIELD DR
CRANSTON RI 02920

	Value	Tax
Original :	189400	4252.03
Exemption Omit :	31882	715.75
Adjusted :	157518	3536.28

7 2109119004 008-2644
Location 35 TRIPOLI ST
TRIPOLI STREET INVESTMENTS LLC
300 CENTERVILLE RD #320 EAST
WARWICK RI 02886-0200

	Value	Tax
Original :	415300	13987.30
ASSESSORS APPE :	83300	2805.54
Adjusted :	332000	11181.76

0000000000
Location

	Value	Tax
Original :		
:		
Adjusted :		

0000000000
Location

	Value	Tax
Original :		
:		
Adjusted :		

	Value	Tax		
Original	1242544	32871.69		
Abatements	189416	5500.64	on 7	Accounts
Adjusted	1053128	27371.05		

City of Cranston
2014 Abatement List

1 0230307501 990-2303-075
Location 1696 CRANSTON ST
BALLETTO CONSTRUCTION INC
GARY BALLETTO
1696 CRANSTON STREET
CRANSTON RI 02920

	Value	Tax
Original :	30416	1042.05
OUT OF BUSINES :	30416	1042.05
Adjusted :		

2 0230743501 990-2307-435
Location 786 ATWOOD AV
BALLETTO'S REALTY
CHRISTINA BALLETTO
786 ATWOOD AVE
CRANSTON RI 02920-2505

	Value	Tax
Original :	10000	342.60
LISTING ERROR :	10000	342.60
Adjusted :		

3 0814423601 990-8144-235
Location 1370 SCITUATE AV
HENRY WASTE DISPOSAL
WALTER HENRY
1370 SCITUATE AVE
CRANSTON RI 02921

	Value	Tax
Original :	17831	610.89
OUT OF BUSINES :	17831	610.89
Adjusted :		

	Value	Tax		
Original	58247	1995.54		
Abatements	58247	1995.54	on 3	Accounts
Adjusted				

City of Cranston
2013 Abatement List

1 0230307501 990-2303-075

Location 1698 CRANSTON ST
BALLETTO CONSTRUCTION INC
GARY BALLETTO
1698 CRANSTON STREET
CRANSTON RI 02920

	Value	Tax
Original :	30466	1043.78
OUT OF BUSINES :	30466	1043.77
Adjusted :		-.01

2 0814423601 990-8144-235

Location 1370 SCITUATE AV
HENRY WASTE DISPOSAL
WALTER HENRY
1370 SCITUATE AVE
CRANSTON RI 02921

	Value	Tax
Original :	17831	610.89
OUT OF BUSINES :	17831	610.89
Adjusted :		

0000000000

Location

	Value	Tax
Original :		
:		
Adjusted :		

	Value	Tax	
Original	48297	1654.65	
Abatements	48297	1654.66	on 2 Accounts
Adjusted		-.01	

City of Cranston
2012 Abatement List

1 0230307501 990-2303-075 0000000000 0000000000
Location 1698 CRANSTON ST Location Location
BALLETTO CONSTRUCTION INC
GARY BALLETTO
1896 CRANSTON STREET
CRANSTON RI 02920

	Value	Tax		Value	Tax		Value	Tax
Original :	26066	893.02	Original :			Original :		
OUT OF BUSINES :	26066	893.02	:			:		
Adjusted :			Adjusted :			Adjusted :		

	Value	Tax		
Original	26066	893.02		
Abatements	26066	893.02	on 1	Accounts
Adjusted				

City of Cranston
2011 Abatement List

1 0230307501 990-2303-075 0000000000 0000000000
Location 1696 CRANSTON ST Location Location
BALLETTO CONSTRUCTION INC
GARY BALLETTO
1696 CRANSTON STREET
CRANSTON RI 02920

		Value	Tax			Value	Tax			Value	Tax
Original	:	21666	658.41	Original	:			Original	:		
OUT OF BUSINES	:	21666	658.43		:				:		
Adjusted	:		-.02	Adjusted	:			Adjusted	:		

	Value	Tax		
Original	21666	658.41		
Abatements	21666	658.43	on 1	Accounts
Adjusted		-.02		

City of Cranston
2010 Abatement List

1 0230307501 990-2303-075

Location 1696 CRANSTON ST
BALLETTO CONSTRUCTION INC
GARY BALLETTO
1696 CRANSTON STREET
CRANSTON RI 02920

0000000000
Location

0000000000
Location

		Value	Tax			Value	Tax			Value	Tax
Original	:	20266	594.59	Original	:			Original	:		
OUT OF BUSINES	:	20266	594.60		:				:		
Adjusted	:		-.01	Adjusted	:			Adjusted	:		

	Value	Tax		
Original	20266	594.59		
Abatements	20266	594.60	on 1	Accounts
Adjusted		-.01		

THE CITY OF CRANSTON

RESOLUTION OF THE CITY COUNCIL

AUTHORIZING MOTOR VEHICLE TAX ABATEMENTS AS RECOMMENDED BY CITY ASSESSOR

No. 2016-4

Passed:
January 25, 2016

John E. Lanni, Jr., Council President

Resolved, That

The request of the City Assessor for the following abatements for manifest errors and reasons therein stated be granted and that a certified copy of this Resolution be for the respective amounts a sufficient voucher for the City Treasurer.

(See attached list of Abatements)

ALLAN FUNG
MAYOR

DIVISION OF ASSESSMENT
869 PARK AVE
CRANSTON, RI 02910

SALVATORE SACCOCCIO JR.
CITY ASSESSOR

DAVID COLE
DEPUTY ASSESSOR

MEMO

DATE: January 6, 2016

TO: His Honor the Mayor and the Honorable City Council

FROM: City Assessor

RE: Motor Vehicle Abatements

The following assessments are recommended for abatement in the amounts and for the reasons hereinafter set forth:

Assessment Date	Value	Tax
December 31, 2014	10,803	458.46

Salvatore Saccoccio, Jr.
City Assessor

City of Cranston
2015 Motor Vehicle
Abatement List

1 31008110 0000004285
Vehicle 2001 FRHT 030773
ID 1FUJA3CG01PG37423
ALVARADO ALBERTO
1 MAPLE ST
Cranston RI 02910

	Value	Tax
Original :	1,360	56.30
EXEMPTION OMITTED		56.30
Adjusted Tax:		

2 34002390 0000036912
Vehicle 2015 TOYT DD 293
ID JTDKN3DU0F0414364
DAMICO DAVID G
158 WESTERN PROMENADE
Cranston RI 02905

	Value	Tax
Original :	64	127.32
WRONG MODEL		2.43
Adjusted Tax:		124.89

3 43005800 0000090347
Vehicle 2004 VOLV 030894
ID 4V4NC9TG14N370428
MANCILLA JOSE L
23 ARLINGTON AVE
Cranston RI 02920

	Value	Tax
Original :	4121	164.67
EXEMPTION OMITTED		164.67
Adjusted Tax:		

4 49018400 0000135573
Vehicle 2013 HYUN 450066
ID 5NPDH4AE2DH270142
SILVA KIM L
1745 PONTIAC AVE
Cranston RI 02920

	Value	Tax
Original :	11,726	574.00
STOLEN/SOLD/JUNK/TOT		236.06
Adjusted Tax:		337.94

00000000 0000000000
Vehicle 0000
ID

	Value	Tax
Original :		
Adjusted Tax:		

00000000 0000000000
Vehicle 0000
ID

	Value	Tax
Original :		
Adjusted Tax:		

For Tax Year: 2015

	Value	Tax
Original :	17271	921.29
		458.46 on 4 Accounts
Adjusted Tax :		462.83

73.

Jan-16 Waiver of Interest Applications

Recommend To Approve:

NAME	ADDRESS	TAX AMT	INTEREST	REASON
Champagne, Kathleen	51 Pheasant Hill Lane	$121.44	$18.22	lostcheck
Croke, Carolyn	111 Wellspring Dr	818.51	$98.24	illness
Ebraheim, Heidi	162 Albert Ave	2,196.90	$329.42	hardship
Engle, Bernice	100 Amherst Rd	6,444.44	$589.90	death
Garfield Ave Foods	50 Garfield Ave	7,666.41	$691.55	lostcheck
Lee, Biing	35 Lindsay Lane	2,583.33	$387.36	illness
Razza, Alfred	64 Briar Hill Dr	1,464.30	$219.65	death
Vespia, Christopher	57 Harcourt st	369.55	$22.17	lostcheck

Recommend to Deny

Bottone, Thomas	17 Bridle Ct	6,163.85	$513.65	no bill